SH

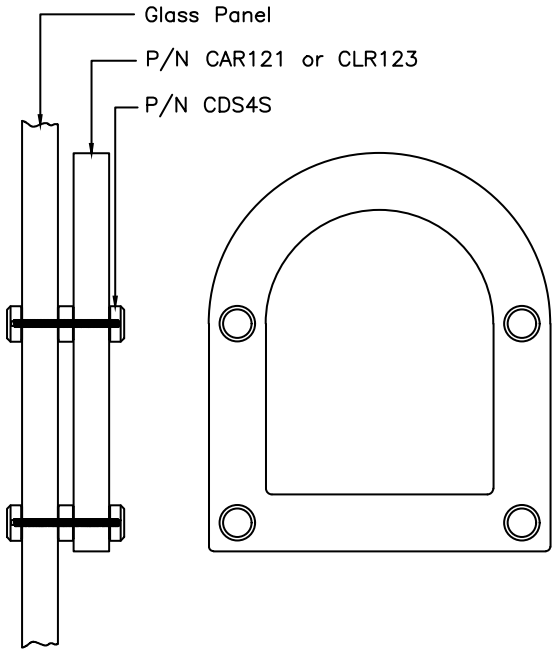

CAR121 or CLR123
installed on glass panel

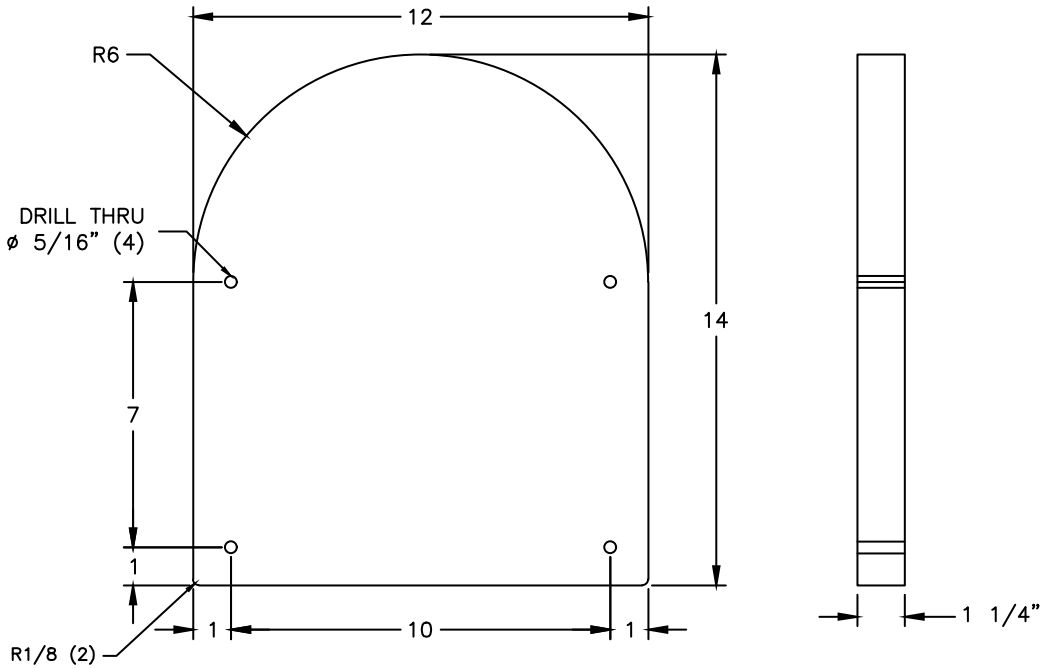

UNLESS OTHERWISE SPECIFIED
DIMENSIONS ARE IN INCHES
TOLERANCE IS:

Frac ± 1/32
.XX ±
.XXX ±
ANGLES ±
RADIAL

REV.	DESCRIPTION	DATE	BY

THIS DRAWING AND THE DESIGN SHOWN THEREIN IS THE PROPERTY OF C.R.LAURENCE CO., INC.
AND USE OR COPIES THEREOF CANNOT BE MADE WITHOUT WRITTEN CONSENT.

C.R. Laurence Co.,Inc
1334 W. 132 Street
GARDENA, CALIFORNIA 90249
PHONE: (310) 515-2289
FAX: (310) 515-1257

DRAWN BY:	SCALE:	DATE:	PART NUMBER
JdL	NTS	11/08/16	SV320(1)LC

PART: 12" x 14" CUT PART

PRODUCT: CLR VISION BR SPEAK-THRU C_R121(3)

NOTE:
PRODUCT P/N CAR121 OR CLR123

DRAWING NUMBER
SV320(1)LC