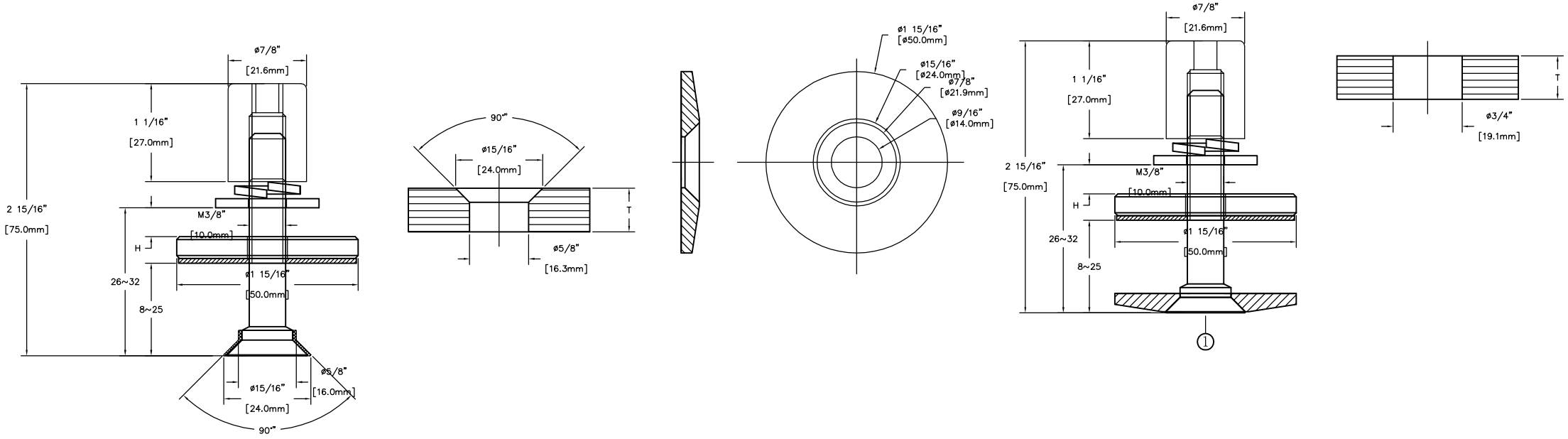
ø7/8"
[21.6mm]
1 1/16"
[27.0mm]
2 15/16"
[75.0mm]
M3/8"
[10.0mm]
H
26~32
8~25
ø1 15/16"
[50.0mm]
ø5/8"
[16.0mm]
ø15/16"
[24.0mm]
90°
90°
ø15/16"
[24.0mm]
ø5/8"
[16.3mm]
T
ø1 15/16"
[ø50.0mm]
ø15/16"
[ø24.0mm]
ø7/8"
[ø21.9mm]
ø9/16"
[ø14.0mm]
ø7/8"
[21.6mm]
1 1/16"
[27.0mm]
2 15/16"
[75.0mm]
M3/8"
[10.0mm]
H
26~32
8~25
ø1 15/16"
[50.0mm]
1
T
ø3/4"
[19.1mm]