SERIES OS175, OS175SG, OS451, OS451SG, OS601, AND OS601SG

OS-2 OFFSET GLAZING SYSTEMS

NOTE

THE INSTALLATION DETAILS FOUND IN THIS PACKAGE ARE GENERIC AND ARE FOR REPRESENTATION ONLY WITH THE INTENT OF GIVING THE INSTALLATION TEAM A VISUAL REPRESENTATION AS TO HOW THE ASSEMBLIES TYPICALLY INSTALL. THE SHOP SUBMISSION DRAWINGS AND DETAILS ARE THE GOVERNING DOCUMENTS AND AS SUCH THIS PACKAGE IS TO BE USED ONLY AS A RESOURCE

FOLLOW SEALANT MANUFACTURERS' RECOMMENDATIONS FOR USE AND APPLICATION OF ALL STRUCTURAL SILICONE SEALANT AND WEATHER SEAL SILICONE SEALANT.

CUSTOMER/PROJECT QUALITY ASSURANCE PROCEDURES ARE SEPARATE DOCUMENTS AND ARE TO BE FOLLOWED IN CONJUNCTION WITH THIS MANUAL.

11M0216_

HANDLING, STORAGE, AND PROTECTION OF ALUMINUM

The following precautions are recommended to protect the material against damage. Following these precautions will help ensure early acceptance of your products and workmanship.

A. HANDLE CAREFULLY.
All aluminum materials at job site must be stored in a safe place, well removed from possible damage by other trades. Cardboard wrapped or paper interleaved materials must be kept dry.

B. CHECK ARRIVING MATERIALS.
Check for quantities and keep records of where various materials are stored.

C. KEEP MATERIALS AWAY FROM WATER, MUD, AND SPRAY.
Prevent cement, plaster or other materials from damaging the finish.

D. PROTECT THE MATERIALS AFTER ERECTION.
Protect erected frame with polyethylene or canvas splatter screen. Cement, plaster, terrazzo, other alkaline solutions, and acid based materials used to clean masonry are harmful to the finish. ***If any of these materials come in contact with the aluminum, IMMEDIATELY remove with water and mild soap.***

IMPORTANT: READ THIS MANUAL THOROUGHLY BEFORE BEGINNING INSTALLATION

GENERAL INSTALLATION NOTES

Recommended Guidelines for All Installations:

1. **REVIEW CONTRACT DOCUMENTS.** Check shop drawings, installation instructions, architectural drawings, and shipping lists to become thoroughly familiar with the project. The shop drawings take precedence and include specific details for the project. Note any ***field verified*** notes on the shop drawings prior to installing. The installation instructions are of a general nature and cover most conditions.
2. **BUILDING CODES.** Due to the diversity in state/provincial, local, and federal laws and codes that govern the design and application of architectural products, it is the responsibility of the individual architect, owner, and installer to assure that products selected for use on projects comply with all the applicable building codes and laws. U.S. Aluminum exercises no control over the use or application of its products, glazing materials, and operating hardware, and assumes no responsibility thereof.
3. **ARCHITECT.** It is the responsibility of the architect to secure approval of the system and request from the Glazing Contractor the compatibility and adhesion test reports described below.
4. **U.S. ALUMINUM.** It is the responsibility of U.S. Aluminum to supply a system to meet the architect's specifications.
5. **INSTALLATION.** All materials are to be installed plumb, level, and true.
6. **INSTALLER QUALIFICATION.** These **Series OS-2** window wall systems are intended for fabrication, assembly, sealing, installation and glazing by professionals with appropriate knowledge and experience of the system(s) and their incorporation into various building conditions.
7. **COORDINATION WITH OTHER TRADES.** Coordinate with the general contractor any sequence with other trades which offset curtain wall installation (i.e. fire proofing, back-up walls, partitions, ceilings, mechanical ducts, converters, etc.)
8. **BENCH MARKS.** All work should start from bench marks and/or column lines as established by the architectural drawings and the general contractor with guaranteed accuracy. Working from these datum points and lines determine:
   a) The plane of the wall in reference to offset lines provided on each floor.
   b) The finish floor lines in reference to bench marks on the outer building columns.
   c) Mullion spacing from both ends of masonry opening to prevent dimensional build-up of daylight opening.
9. **EXPANSION JOINTS.** Expansion joints and perimeter seals shown in these instructions and in the shop drawings are shown at normal size. Actual dimensions may vary due to perimeter conditions and/or difference in metal temperature between the time of fabrication and the time of installation. Gaps between expansion members should be based on temperature at time of installation.

GENERAL INSTALLATION NOTES (CONTINUED)

Recommended Guidelines for All Installations:

10. **FASTENING.** Within the body of these instructions "fastening" means any method of securing one part to another or to adjacent materials. Only those fasteners used within the system are specified in these instructions. Due to the varying perimeter conditions and performance requirements, perimeter and anchor fasteners are not specified in these instructions. For perimeter and anchor fasteners refer to the shop drawings or consult the fastener supplier.

11. **FIELD WELDING.** All field welding must be adequately shielded to avoid any splatter on glass or aluminum. Results will be unsightly and/or structurally unsound. Advise general contractor and other trades accordingly. All field welds of steel anchors must receive touch-up paint (zinc chromate) to avoid rust.

12. **SURROUNDING CONDITIONS.** Make certain that construction which will receive your materials is in accordance with the contract documents. If not, notify the general contractor in writing and resolve differences before proceeding with work.

13. **ISOLATION OF ALUMINUM.** Aluminum to be placed in direct contact with uncured masonry or incompatible materials should be isolated with a heavy coat of bituminous paint. For steel reinforcement primer, use manufacturer's standard corrosion resistant primer, meeting or exceeding Sherwin Williams Kem Kromik® and ASTM D5894, 1008 Corrosion Resistance.

14. **SEALANTS.** The fabrication and installation of a structural silicone-glazed (SSG) or wet glazed system requires more technical knowledge and experience than is required for a conventional pressure-glazed or dry glazed system. The glazing contractor should take all steps as outlined and required by the structural silicone sealant manufacturer, glass fabricator, framing manufacturer, and the project professional engineer of record as well as follow local building code requirements and industry best practices to ensure the proper installation and safe performance of the SSG system.

    The glazing contractor for each project needs to ensure compliance with each step, including, but not limited to, design reviews, formal adhesion testing, formal compatibility testing, project specification compliance, validating procedures, field testing, and quality control validation of installed product and surrounding conditions.

    Testing of component materials for use in a SSG or wet glazed system is mandatory to fulfill project specifications and warranty requirements and must be submitted by the glazing contractor to the structural silicone manufacturer. All materials that comprise the structural silicone joint, such as the framing system (with the job-specific finish) and job-specific glass must be tested by the structural silicone manufacturer for compatibility and adhesion. All other accessory materials in contact with the structural silicone, such as setting blocks, spacers, gaskets, sweeps, air seals and expansion joints, must also be submitted to the silicone sealant manufacturer for compatibility testing.

    To ensure that nothing has changed in formulation or chemistry since the initial tests, subsequent testing during periodic time frames of the project is to be conducted to confirm continued acceptance of the material for use on the project.

    To ensure the structural performance and integrity of the insulating glass unit (IGU), the glazing contractor must submit the project shop drawings to the glass fabricator to obtain approval for use of their product(s) in any 2, 3 or 4-sided SSG applications.

    Quality control procedures for field glazing are to be increased beyond those required for shop glazing. Job conditions will normally have dust, dirt, and other construction debris on the surfaces where structural silicone is to be applied. Great care should be exercised in cleaning and preparing these surfaces for silicone application. The recommendations of the silicone sealant manufacturer are to be strictly enforced and followed. The fabrication and installation of the SSG system and its components, whether shop or field glazed, should be governed by a quality control program, and all steps, procedures, and test reports should be documented throughout the project.

    Prior to installation of any SSG system, refer to industry documents (e.g., AAMA Curtain Wall Design Guide Manual, ASTM C1401-14, and AAMA SSGDG-17) for detailed instructions and recommendations.

    THE GLAZING CONTRACTOR ASSUMES FULL RESPONSIBILITY FOR ENSURING COMPLIANCE WITH THE ABOVE, AND ASSUMES FULL LIABILITY FOR ANY ISSUES ARISING FROM NONCOMPLIANCE.

15. **APPLICATION.** Structural silicone must be applied from the interior, and weather seal from the exterior, after the interior structural silicone has fully cured

GENERAL INSTALLATION NOTES (CONTINUED)

Recommended Guidelines for All Installations:

16. **MAXIMUM ALLOWABLE STRESS ON SILICONE.** The maximum allowable size of the glass lite is controlled by the width and depth of the silicone joint combined with the specified design windload (PSF or Pa). The stress on the structural silicone must not exceed 20 PSI (137 KPa) for a 6:1 safety factor. Check Structural Silicone Chart in the Architectural Design Manual for this product series.

17. **GLAZING PRACTICES.** The air and water performance of these **Series OS-2** window wall systems is directly related to the completeness and integrity of the installation process, including but not limited to the assembly seals of the framing joinery, the installed glazing gaskets, and the alignment of the framing joinery glazing plane. Before glazing, verify the glazing pocket width and glazing infill thickness, as both must be in tolerance to assure adequate edge pressure and to achieve the desired air and water performance levels. (In general, framing systems utilizing 1” insulating glass are designed to accommodate a thickness variance of +/- 1/32”). Note: Excessive pressure can cause glass breakage and/or IGU failure. Consult the glass manufacturer for their recommended edge pressure per lineal inch.

    - To achieve the designed and tested air and water performance, best practices include:
    - Glazing gaskets should be cut ¼” longer per foot, and lay flat, preferably for 24 hours
    - Gaskets should be cut as single monolithic pieces and “crowded” during their installation to avoid corner gaps caused by post-installation relaxation
    - The interior glazing gasket should be installed so as to avoid stretching, buckles, or tears
    - Corners must be cut square, and at a slight angle when required to conform to the bevel on the intersecting gasket; sealed and butted together.
    - Gasket corner joinery must also be crowded, and sealant applied onto the gasket contact frame surface and into gasket reglet raceway where applicable.
    - Gasket corner seals are to be done just prior to installing glass, while the sealant is still wet and uncured, and ensure exterior gaskets are installed so as to place the glass into it’s final in service condition and allow the sealant to conform to optimum configuration. Note: If the sealant cures prior to glazing, the cured sealant could create excessive edge pressure onto the glass and has the potential to cause glass breakage.
    - The glass must be checked for squareness, size dimension, and thickness along the edges paying attention to any variances from center edge to corner edge
    - Check the placement of the installed glass and verify there is proper edge bite into the pocket, and proper edge clearance from framing elements

    After sealant has set and a representative amount of the wall has been installed and glazed (250 square feet or more) run a water hose test in accordance with AAMA 501.2 specifications to check installation. On large projects the hose test should be repeated during the glazing operation. Consult and follow NGA’s GANA Manual and FGMA Glazing Manual for proper glazing technique and procedure.

18. **CARE AND MAINTENANCE.** Final cleaning of exposed aluminum surfaces should be done in accordance with AAMA 609.1 for anodized aluminum and 610.1 for painted aluminum.

The rapidly changing technology within the architectural aluminum products industry demands that C.R. Laurence/U.S. Aluminum reserve the right to revise, discontinue, or change any product line, specification, or electronic media without prior written notice.

NOTE: Dimensions in parentheses ( ) are millimeters unless otherwise noted.

TABLE OF CONTENTS

SITE PREPARATION

BEFORE INSTALLATION

1. Review and measure the opening. Verify framing is plumb, straight, and true around window opening.
2. Verify rough window opening size has 1/2" (12.7) clearance in both width and height to the window. Measure opening at each end and at center vertically and horizontally. Make corrections to openings as required. Measure opening diagonally to check squareness. Chip concrete high points to flush and rounded corners to square.

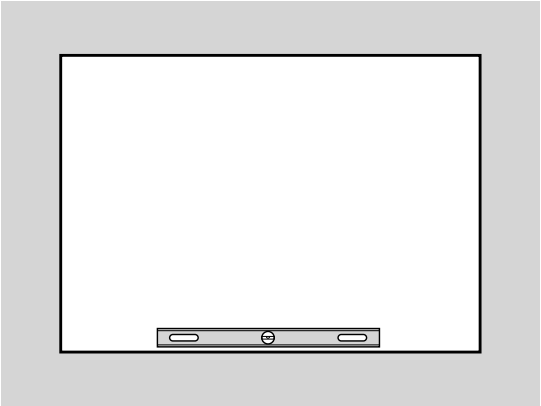

LEVEL

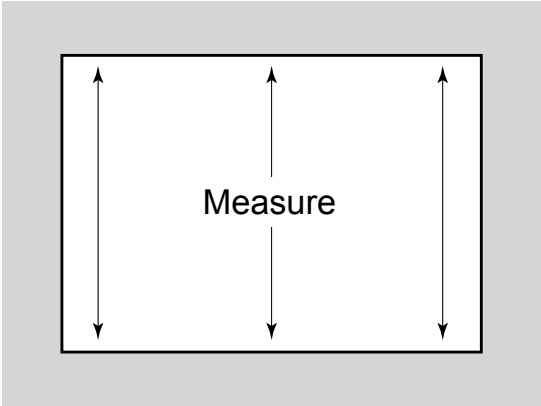

VERTICAL DIMENSION

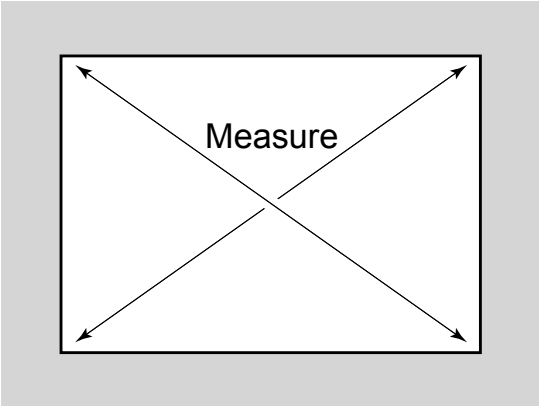

SQUARE

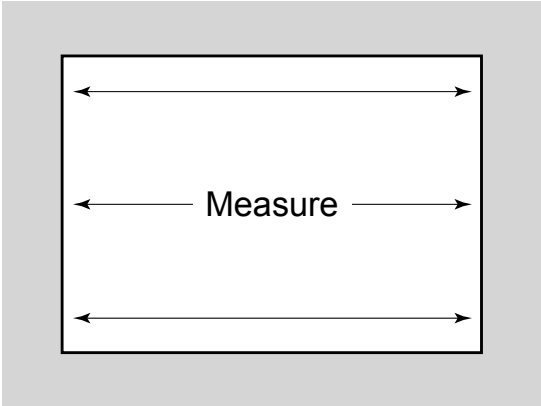

HORIZONTAL DIMENSION

FRAME FABRICATION AND ASSEMBLY

Most details in these instructions show members. Series OS175, OS175SG, OS451, OS451SG, OS601, and OS601SG are similar.

Measure ROUGH OPENING to determine FRAME DIMENSION allowing 1/4" (6.4) minimum clearance for shimming and caulking around perimeter.

1. Cut members to size.

Head and Sill Channels:	FRAME WIDTH If opening exceeds 24' (7.32 m) in width, splice sleeves must be used at splice joints. See page 23.
Wall Jambs and Verticals:	FRAME HEIGHT minus 5/8" (15.9)
Head and Sill Fillers:	+0" D.L.O. -1/32" (0.8)
Horizontal Members:	+0" D.L.O. -1/32" (0.8)
Intermediate Horizontal Fillers:	D.L.O. minus 1/32" (0.8)
Horizontal Glazing Beads:	D.L.O. minus 1/32" (0.8)
Horizontal Face Covers: (Series OS175, OS451 and OS601)	D.L.O. minus 1/32" (0.8)
Horizontal Face Covers: (Series OS175SG, OS451SG and OS601SG)	FRAME WIDTH minus 4-1/32" (102.4)
Vertical Spandrel Adaptors:	D.L.O. plus 1" (25.4)
Horizontal Spandrel Adaptors:	D.L.O. minus 1/8" (3.2)

EXTERIOR GLAZING FOR STRUCTURAL SILICONE APPLICATION

The following schematic details show proper horizontal member selection.

Head Section

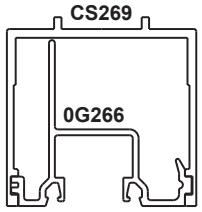

CS269 / 0G266 for Series OS175SG 1/4" (6) or 3/8" (10) Glazing

Intermediate Horizontal Section

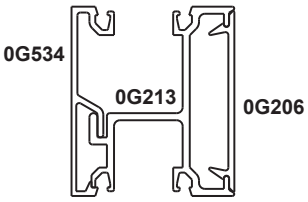

CG213 / 0G534 / 0G206 for Series OS175SG 1/4" (6) or 3/8" (10) Glazing

Sill Section

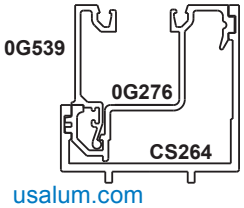

CS264 / 0G276 / 0G539 for Series OS175SG 1/4" (6) or 3/8" (10) Glazing

usalum.com

V 2024-1007

FRAME FABRICATION AND ASSEMBLY (CONTINUED)

EXTERIOR GLAZING FOR STRUCTURAL SILICONE APPLICATION

The following schematic details show proper horizontal member selection.

Head Sections

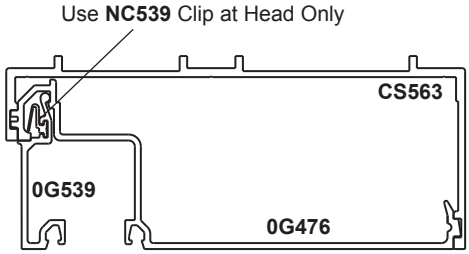

CS563 / 0G576 / 0G539 for Series OS451SG 1" (25) Glazing

CS664 / 0G776 / 0G539 for Series OS601SG 1" (25) Glazing

Intermediate Horizontal Sections

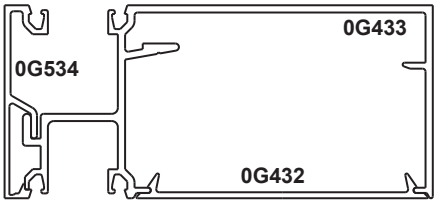

OG533 / 0G532 / 0G534 for Series OS451SG 1" (25) Glazing

OG733 / 0G732 / 0G534 for Series OS601SG 1" (25) Glazing

Sill Sections

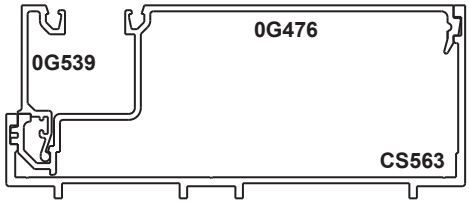

CS563 / 0G576 / 0G539 for Series OS451SG 1" (25) Glazing

CS664 / 0G776 / 0G539 for Series OS601SG 1" (25) Glazing

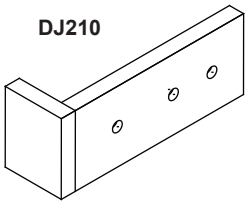

Drill Jig Used With 4-1/2" Systems

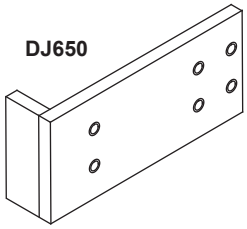

Drill Jig Used With 6" Systems

FRAME FABRICATION AND ASSEMBLY (CONTINUED)

The following schematic details show proper horizontal member selection.

EXTERIOR GLAZING

Head Sections

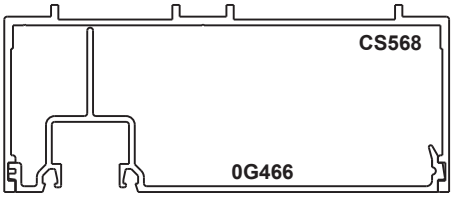

CS568 / 0G566 for Series OS451 1" (25) Glazing

CS669 / 0G766 for Series OS601 1" (25) Glazing

Intermediate Horizontal Sections

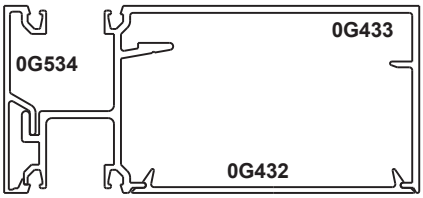

0G533 / 0G532 / 0G534 for Series OS451 1" (25) Glazing

0G733 / 0G732 / 0G534 for Series OS601 1" (25) Glazing

Sill Sections

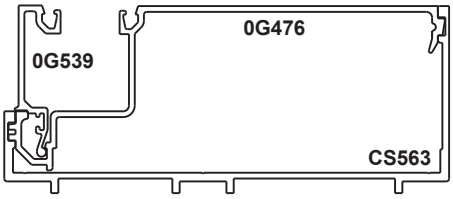

CS563 / 0G576 / 0G539 for Series OS451 1" (25) Glazing

CS664 / 0G776 / 0G539 for Series OS601 1" (25) Glazing

INTERIOR GLAZING

Head Sections

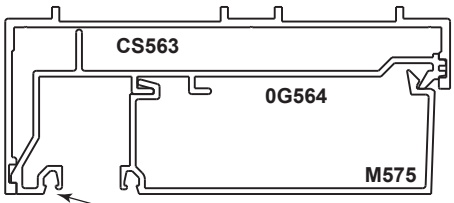

Requires special exterior gasket, **NP142**

CS563 / 0G564 / M573 for Series OS451 1" (25) Glazing

CS664 / 0G764 / M775 for Series OS601 1" (25) Glazing

Intermediate Horizontal Sections

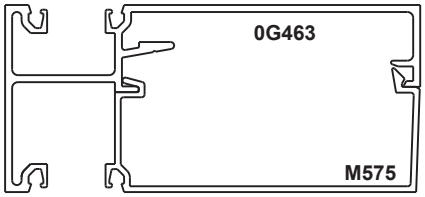

0G563 / M573 for Series OS451 1" (25) Glazing

0G763 / M775 for Series OS601 1" (25) Glazing

Sill Sections

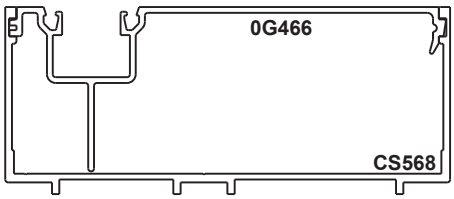

CS568 / 0G566 for Series OS451 1" (25) Glazing

CS669 / 0G766 for Series OS601 1" (25) Glazing

FRAME FABRICATION AND ASSEMBLY (CONTINUED)

2. Fabricate 1/4" (6.4) dia. weep holes in sill channel, two per glass lite at 12" (304.8) from verticals. Weep slots may be drilled in face or bottom of sill channel. **See DETAIL E on page 12**.

3. Mark on verticals the location of horizontal members and drill holes for assembly screws. The use of U.S. Aluminum. Drill Jigs is recommended. **See DETAIL A.**

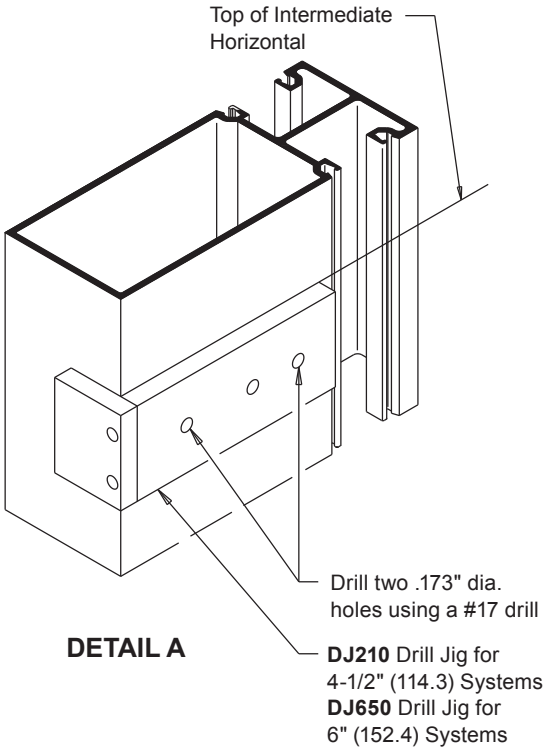

DETAIL A

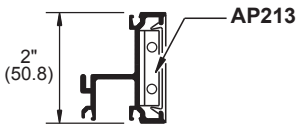

SERIES OS175 and OS175SG

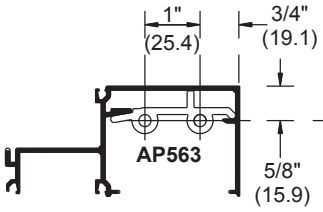

SERIES OS451 and OS451SG

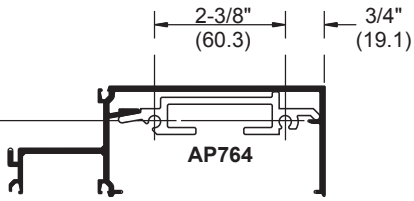

SERIES OS601 and OS601SG

4. Attach anchor clips to verticals with screws provided. **See DETAIL B**.

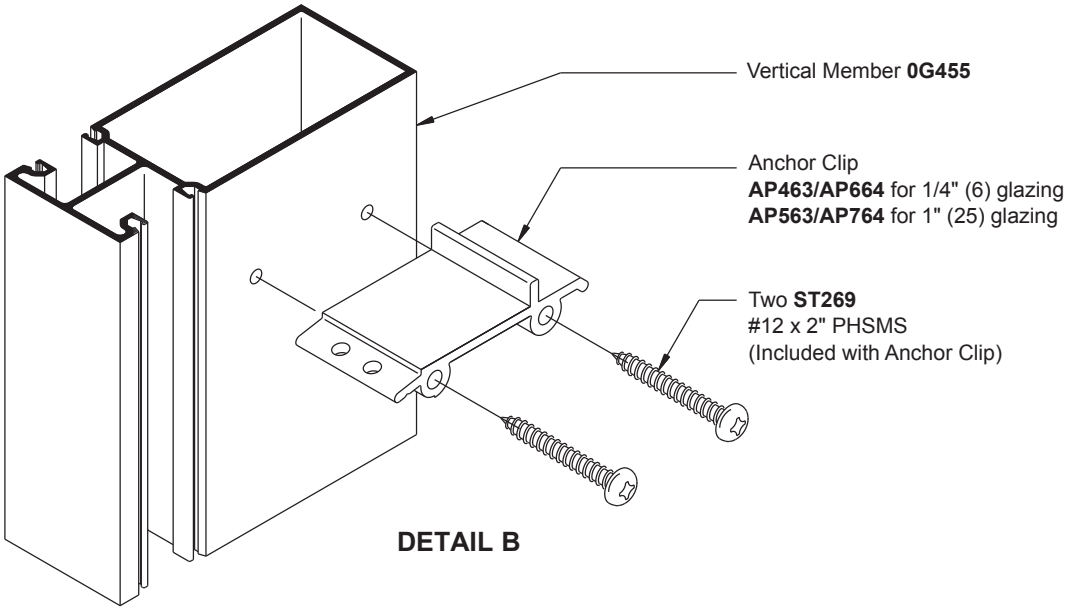

DETAIL B

usalum.com

V 2024-1007

FRAME FABRICATION AND ASSEMBLY (CONTINUED)

5. Apply end dams to head and sill channels at ends of opening and secure with screws. Seal around joint to control water infiltration. **See DETAIL C**.

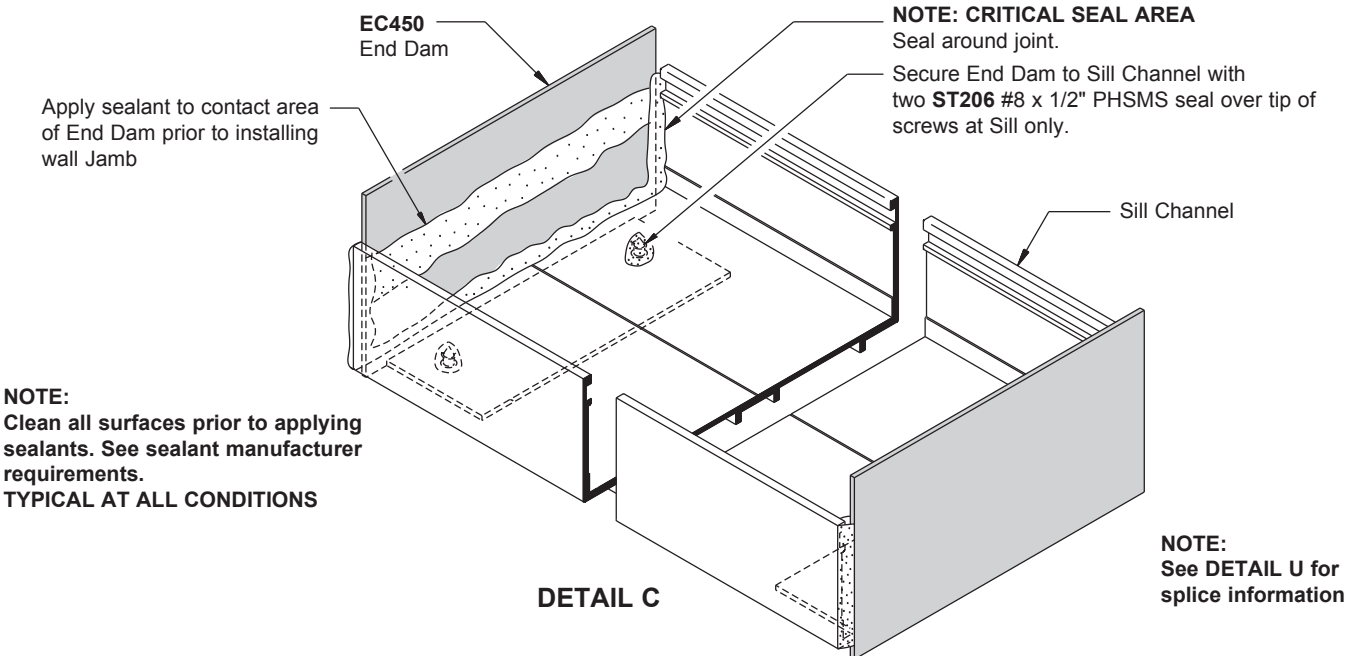

DETAIL C

FRAME INSTALLATION

1. Set head and sill channels in place plumb and square; shim as required to level and anchor to structure. Locate fasteners 6" (152.4) each side of verticals and 24" (609.6) on center or as required. Holes for fasteners should be elongated laterally to allow for thermal expansion. Seal over head of fasteners.
   Pin head and sill to structure at one point only per cut length. (This hole is not elongated).
   Sill should be shimmed at fastener's location and under loading points. **See DETAIL D**.
   Make sure sill channel remains clean of debris during installation to prevent blockage of weep holes.

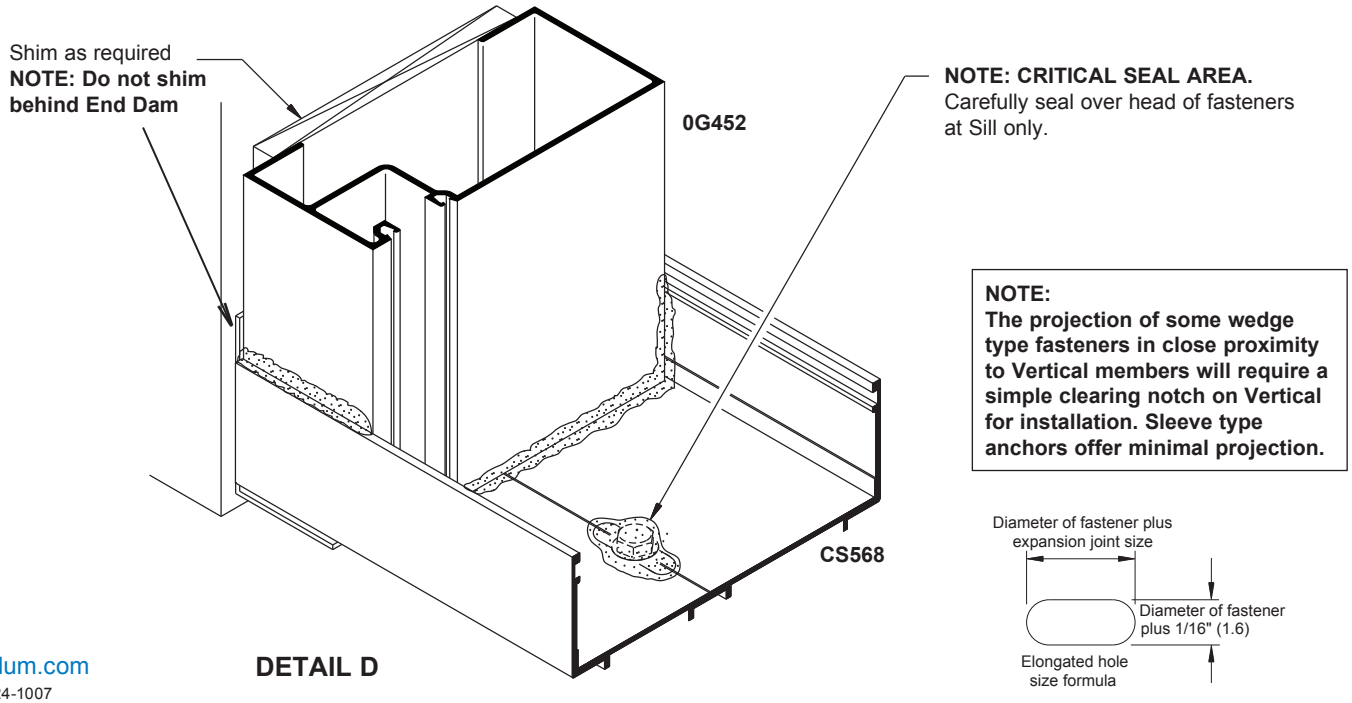

DETAIL D

FRAME INSTALLATION (CONTINUED)

2. INTERIOR GLAZING ONLY: Install urethane baffles into sill channel at weep slot locations (Use sealant to hold them in place if necessary). **See DETAIL E**.
3. Install wall jamb into head and sill channels. Shim and plumb as required. **See DETAIL D**.
4. Snap-in head and sill fillers for the first glass bay.

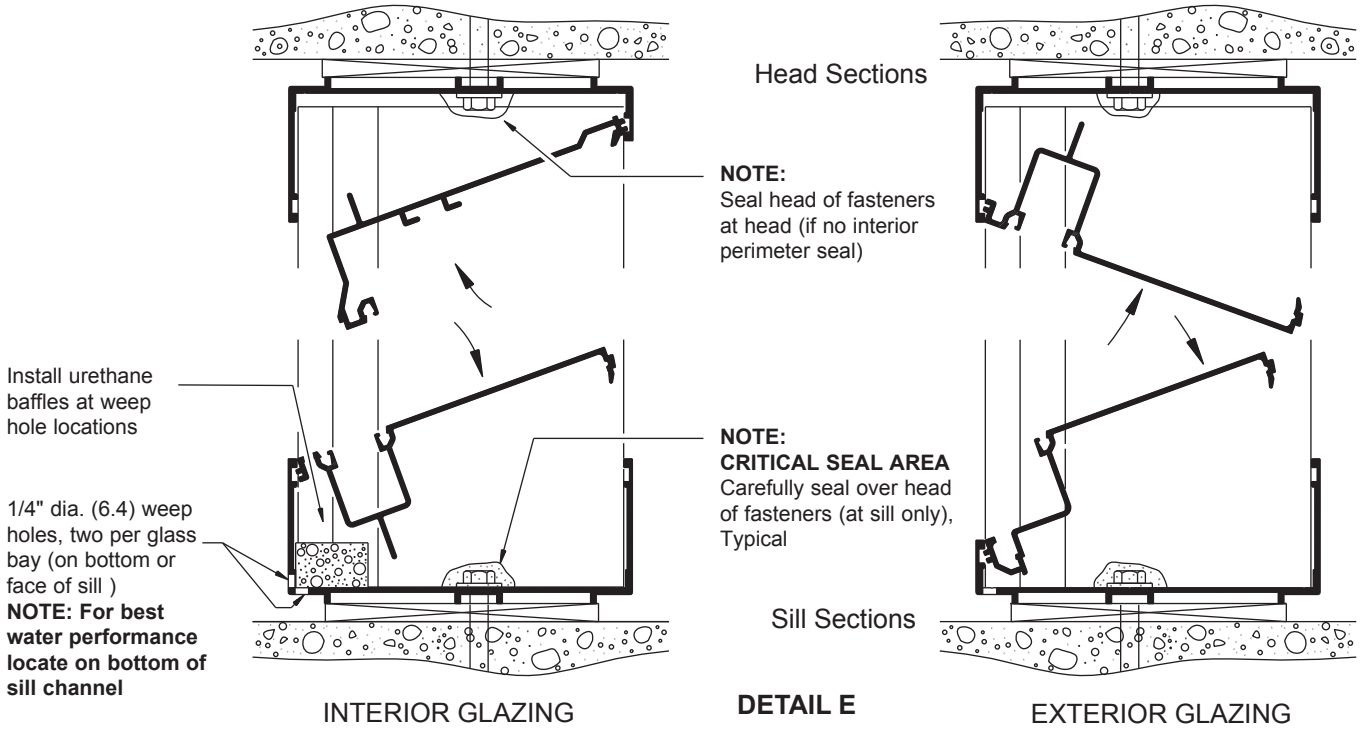

DETAIL E

5. Install next vertical tight against head and sill fillers. **NOTE:** Verticals for 1" (25) glazing are not symmetrical. **Never allow two shallow pockets to face each other. Seal joint where verticals meet head and sill. Verticals must be secured to head/sill channels when end reactions exceed 500 lbs. (2224 N)**
6. Snap-in head and sill fillers for the second glass bay and repeat steps 4 and 5 until all verticals are installed and all head and sill inserts are snapped-in place. At the last glass bay install wall jamb in place before snapping-in head and sill fillers.
   NOTE: A check should be made every four bays to monitor accumulation of horizontal members cutting tolerances.
7. Roll horizontals over anchor clips and secure with screws provided. **See DETAIL F.**
   For SERIES OS175SG, OS451SG and OS601SG **go to Page 14**.

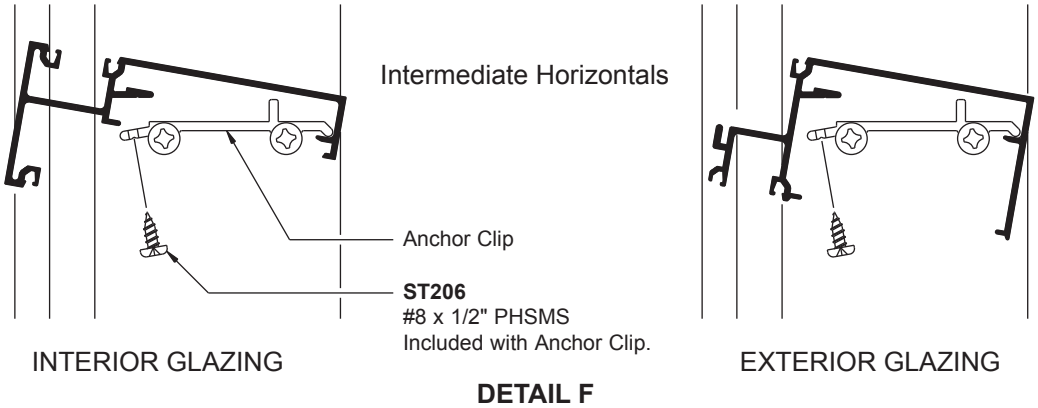

DETAIL F

FRAME INSTALLATION (CONTINUED)

8. Apply sealant to vertical glazing pocket and gasket reglet at vertical/horizontal intersection. Silicone must be applied to two sides of pocket only. Clearance at outside will allow infiltrated water to run down to subsill. **See DETAIL G**.

9. Insert water deflectors into glazing pocket and slide them down to position. **See DETAIL G**. Top of deflector must be flush with horizontal glazing pocket. **NOTE:** Water deflectors applied to door jambs must be sealed all around to prevent water from running to floor (water will drain at opposite end).

   NOTE: For interior glazing applications, seal horizontal to vertical joints. **See DETAIL G**.

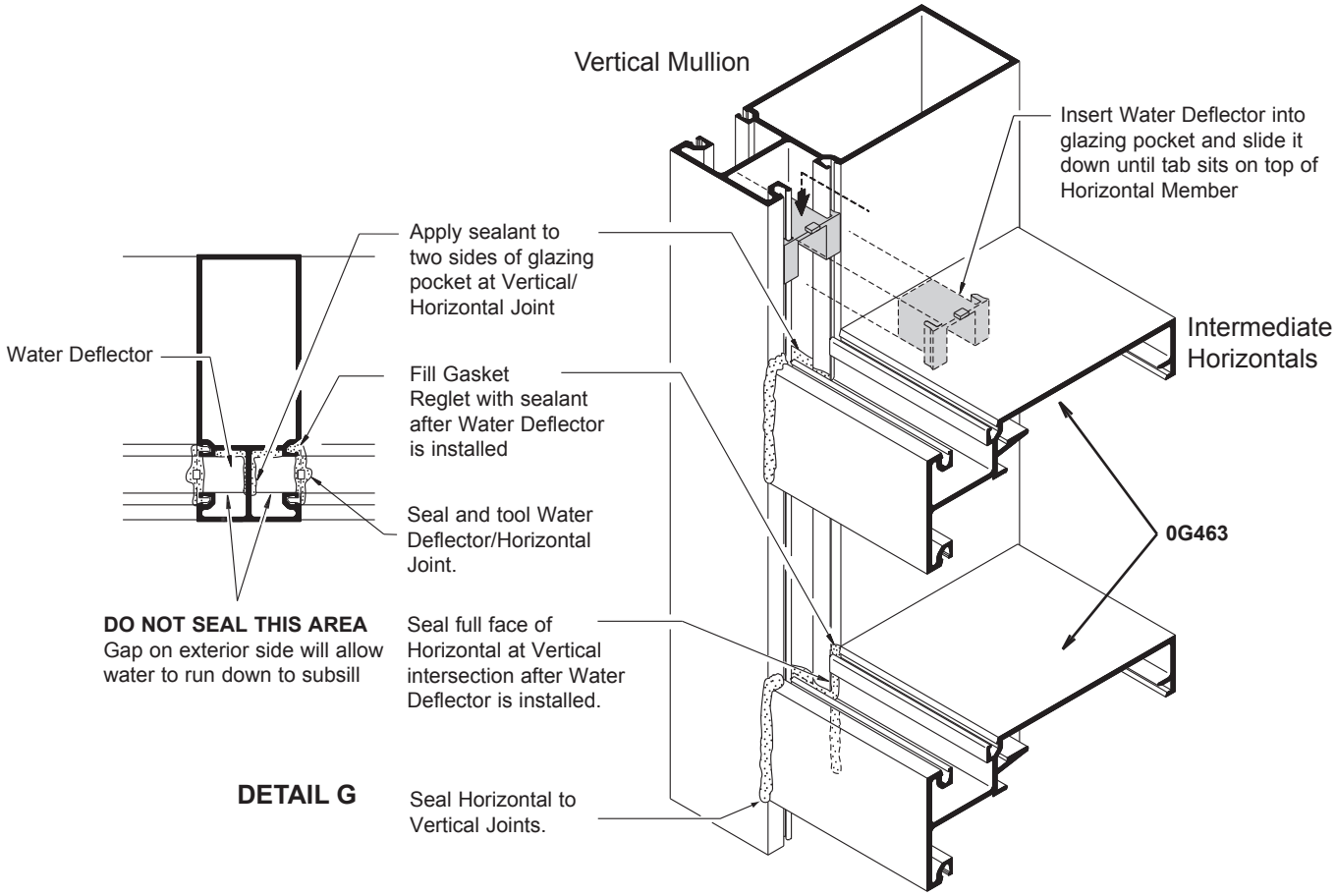

10. INTERIOR GLAZING. When interior glazing a multistory building exterior perimeter sealing must be done before glazing, unless caulking is to be done from the exterior as a secondary operation. **See DETAIL H**.

    EXTERIOR GLAZING. Perimeter sealing may be done later.

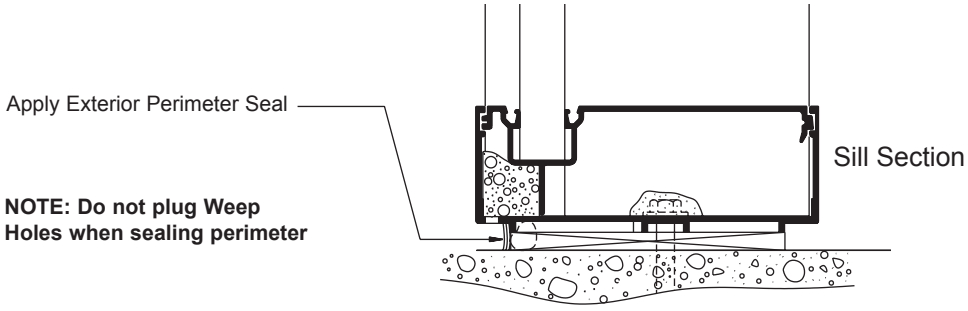

DETAIL H

GLAZING

SERIES OS175, OS451 AND OS601

For STRUCTURAL SILICONE GLAZING, SERIES OS175SG, OS451SG AND OS601SG
See page 17

GLASS SIZES*

SERIES OS175,	Daylight Opening + 5/8" (15.9)
SERIES OS451, AND OS601	Daylight Opening + 7/8" (22.2)

* These formulas do not take into account glass tolerance. Consult glass manufacturer before ordering glass.

NOTE: Cut glazing gaskets to size. Gaskets should be cut 1/8" (3.2) longer per foot of aluminum member to allow for shrinkage. Same gaskets are used for interior and exterior.

INTERIOR GLAZING

1. Install setting blocks, two per glass lite, into horizontal and sill members. Check deadload charts and shop drawings for correct setting block locations.
2. Install exterior gaskets. **NOTE: Head insert requires a special gasket NP142.** Vertical gaskets run through. Start at corners and work towards center. Tight butt joined corners are critical to avoid leakage.

   NOTE: All glazing pockets must be clean of debris before glazing to prevent blockage of weeps or drains.
3. Set glass in place following the four step procedure. **See DETAIL I**. Be careful not to disturb exterior gasket while installing glass. Center glass in opening and rest on setting blocks pressed against exterior gaskets.

INTERIOR GLAZING SEQUENCE
1. Into pocket (Into deep pocket at SERIES OS451 and OS601)
2. Swing to plane
3. Slide to other (shallow) pocket
4. Slide carefully down onto setting blocks

NOTE: For 1" (25) glazing never allow two shallow pockets to face each other

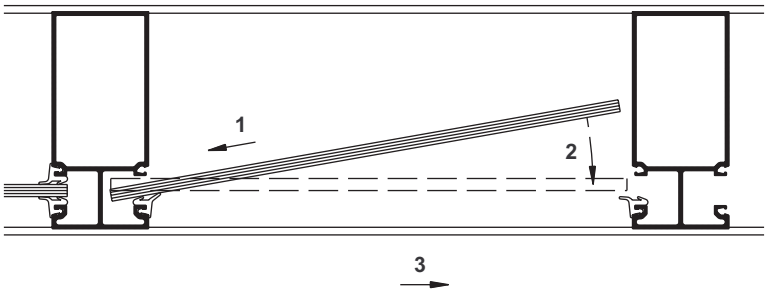

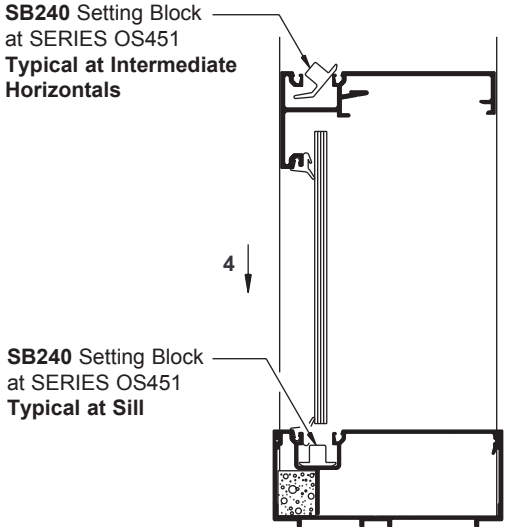

DETAIL I

GLAZING (CONTINUED)

EXTERIOR GLAZING

1. Install interior gaskets. Horizontal gaskets run through. Start at corners and work towards center. Tight butt joined corners are critical to avoid leakage.

   NOTE: All glazing pockets must be clean of debris before glazing to prevent blockage of weeps or drains.
2. Set glass in place following the four step procedure. **See DETAIL J**. Be careful not to disturb interior gasket while installing glass. Center glass in the opening.
3. Install setting blocks in horizontal/sill members. Check deadload charts and shop drawings for correct setting block locations. Rest glass on setting blocks pressed against interior gaskets.

EXTERIOR GLAZING SEQUENCE
1. Into pocket (Into deep pocket at SERIES OS451 and OS601)
2. Swing to plane
3. Slide to other (shallow) pocket
4. Raise into top Horizontal

NOTE: For 1" (25) glazing never allow two shallow pockets to face each other

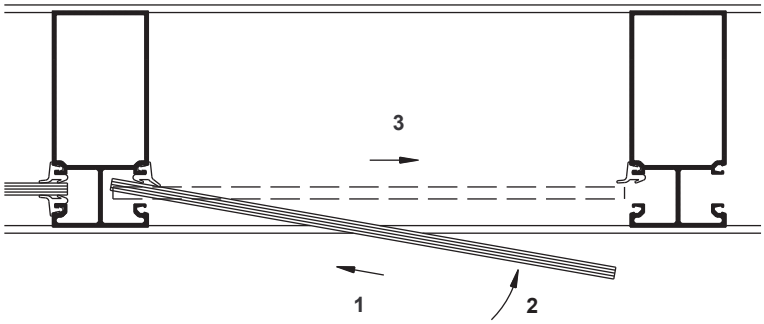

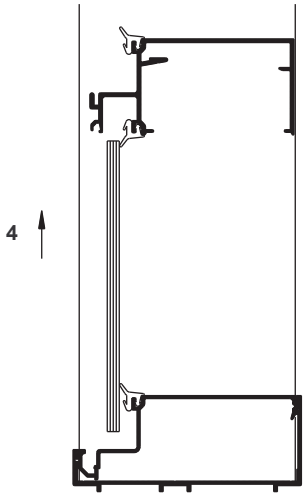

DETAIL J

4. Snap-in glazing beads. **See DETAIL K**.

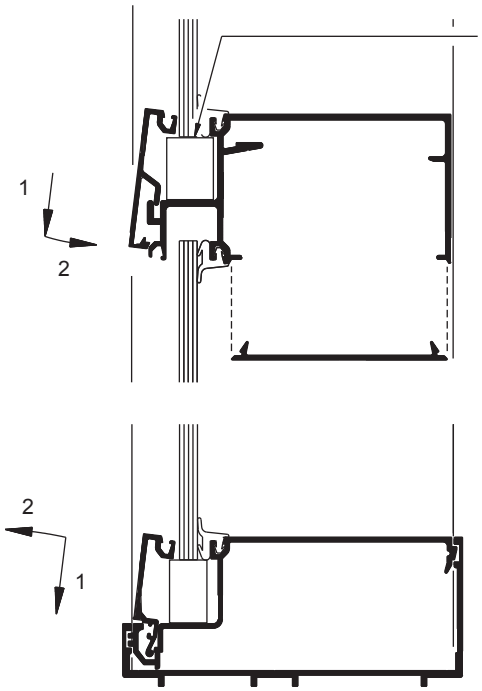

SB140 Setting Block at SERIES OS175,

SB230 Setting Block at SERIES OS451 and OS601. **Typical at Horizontals and Sill**

EXTERIOR GLAZING

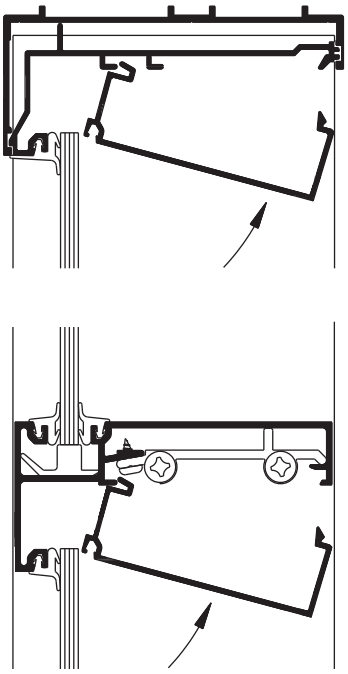

INTERIOR GLAZING

DETAIL K

GLAZING (CONTINUED)

5. To prevent glass from shifting in the opening "W" edge blocks should be installed into vertical pockets at center point or as recommended by glass manufacturer. **See DETAIL L**.
   Series OS175: Use two "W" blocks per glass lite (one at each side of glass).
   Series OS451 and OS601: Use one "W" block per glass lite (at deep glazing pocket only).

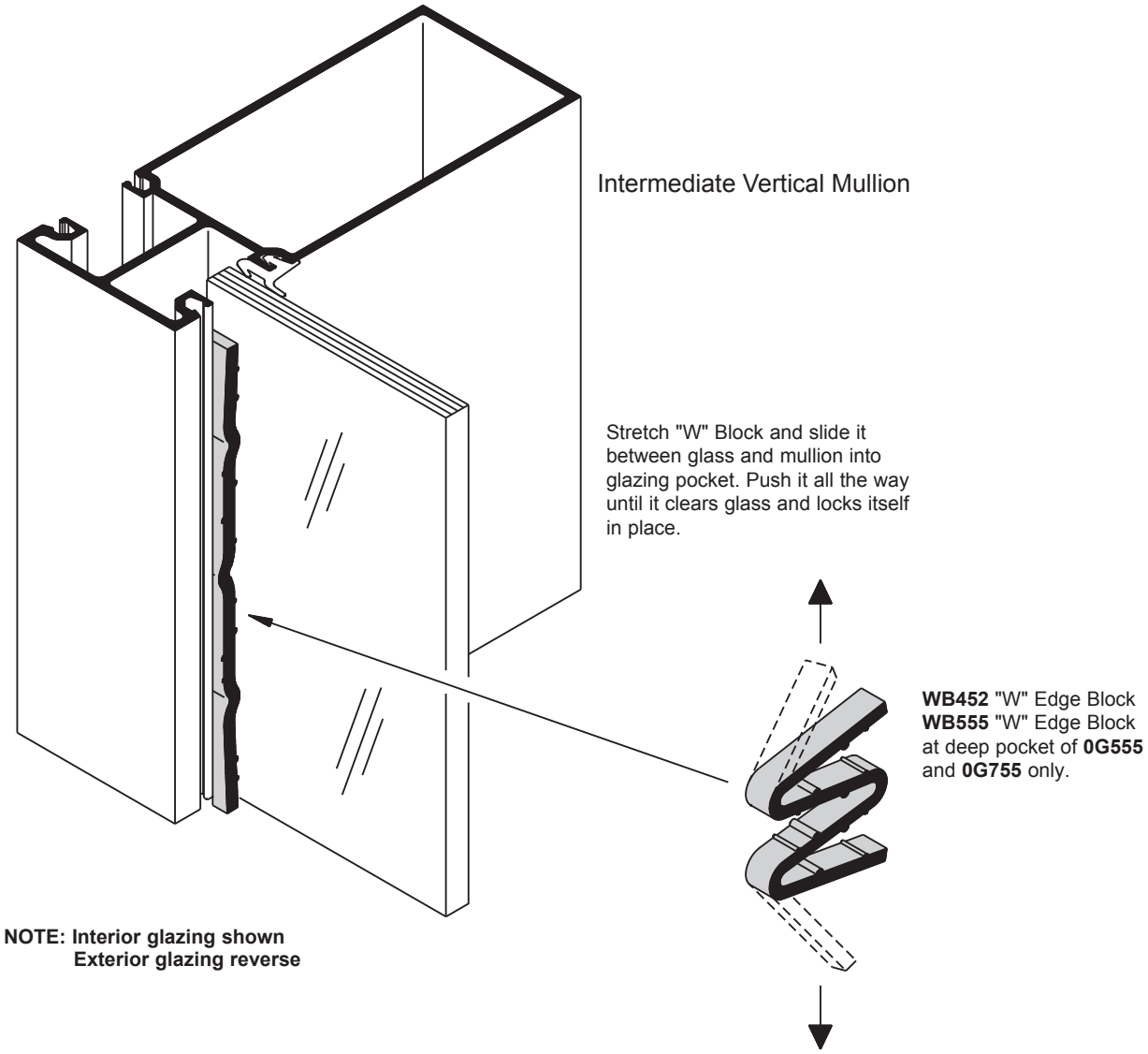

DETAIL L

6. Install remaining gaskets. Vertical gaskets run through. Start at corners and work toward center. Tight butt joined corners are critical to avoid leakage. Seal gasket at corners (interior).

STRUCTURAL SILICONE GLAZING

SERIES OS175SG, OS451SG AND OS601SG

GLASS SIZES*	Glass Height	Glass Width
SERIES OS175SG	D.L.O. + 5/8" (15.9)	D.L.O. + glass bites
SERIES OS451SG AND OS601SG	D.L.O. + 7/8" (22.2)	D.L.O. + glass bites

*These formulas do not take into account glass tolerance. Consult glass manufacturer before ordering glass.

GLASS BITES (NON-CORNERS)

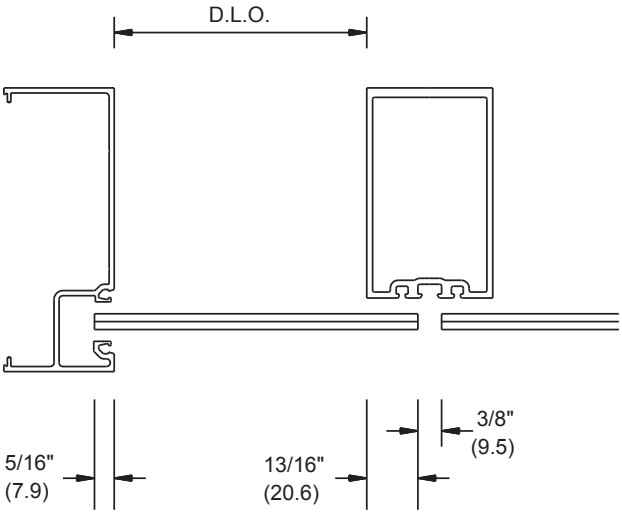

SERIES OS175SG

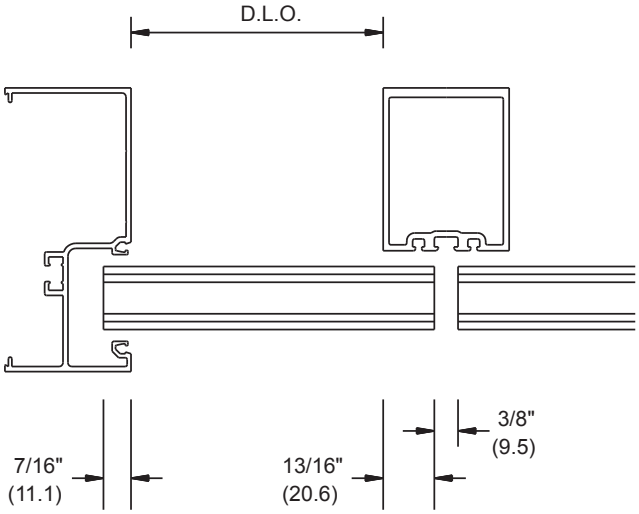

SERIES OS451SG AND OS601SG

STRUCTURAL SILICONE GLAZING (CONTINUED)

GLASS BITES FOR CORNER CONDITIONS

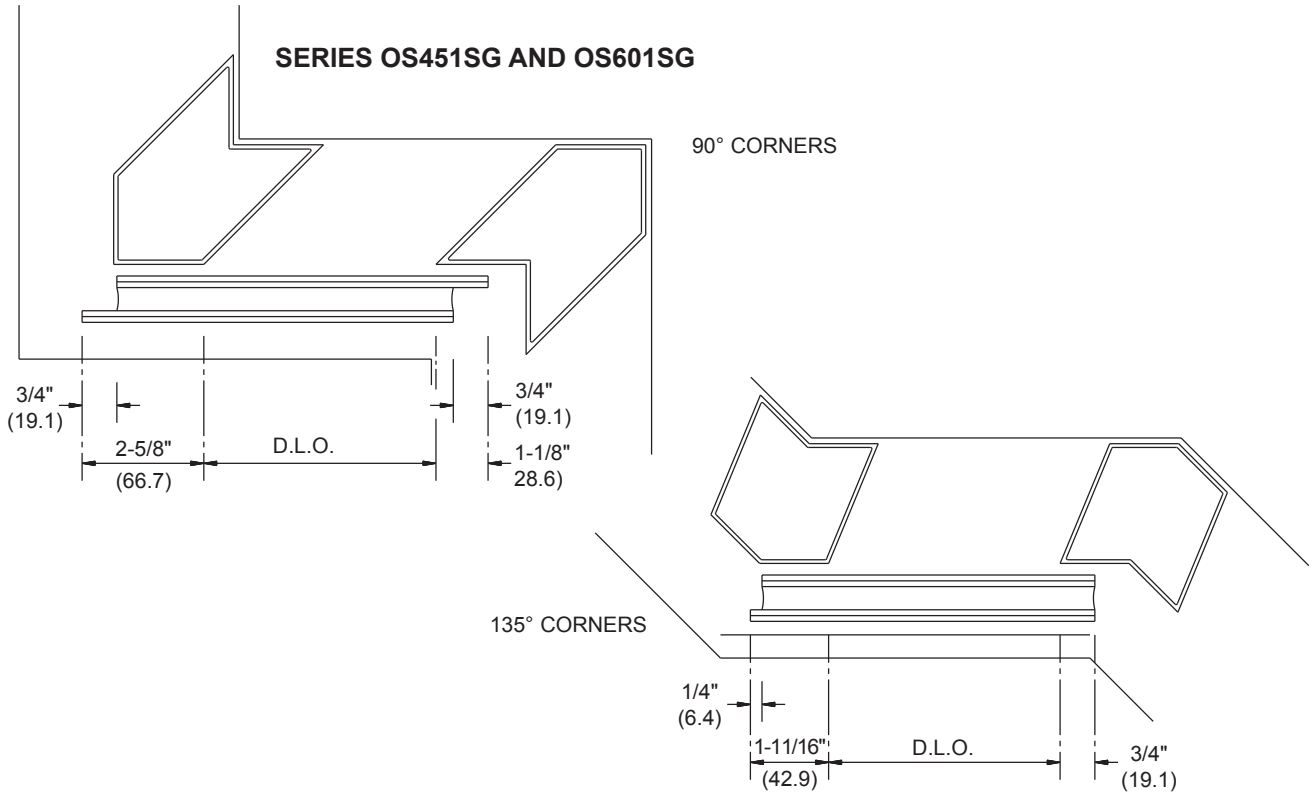

STRUCTURAL SILICONE GLAZING

NOTE: ALL STRUCTURAL SEALANTS REQUIRE TESTING AND APPROVAL

1. Seal joints between horizontals and verticals. Apply sealant across face of intermediate verticals at water deflectors location. **See DETAIL M**.
2. Apply sealant to deflectors contact areas and set them in place. **See DETAIL M**.

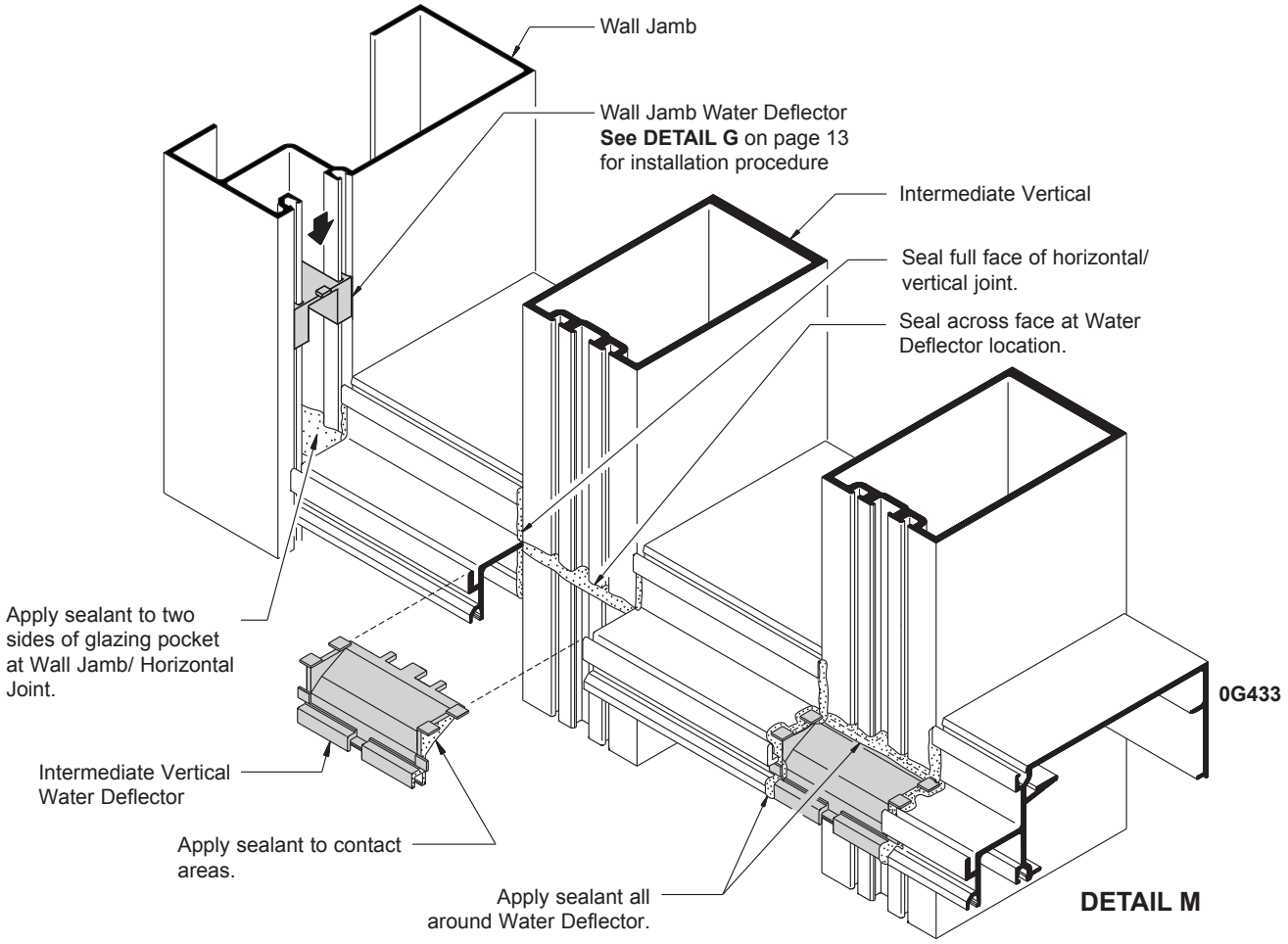

DETAIL M

3. Insert **SP450** Spacers into intermediate verticals. **See DETAIL N**. **NOTE: SP450** Glazing Spacers terminate at top of Water Deflectors.

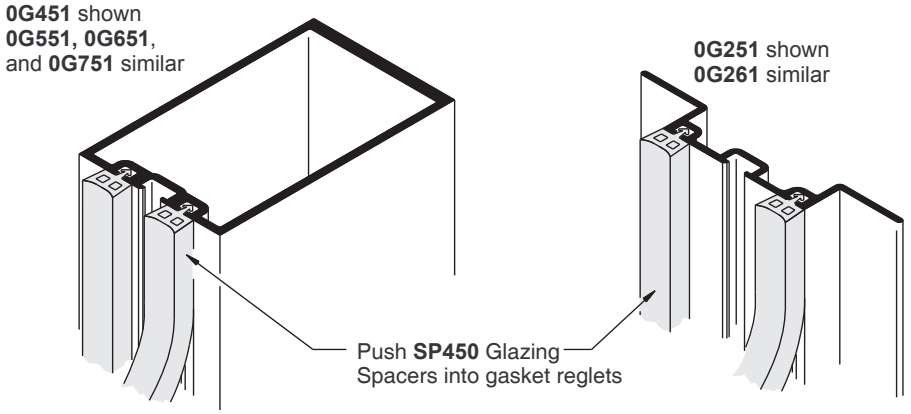

DETAIL N

STRUCTURAL SILICONE GLAZING (CONTINUED)

NOTE: All glazing pockets must be clean of debris before glazing.
Always protect edges of glass carefully to avoid damage.

1. Install two setting blocks per glass lite in horizontal and sill members. Check deadload charts and shop drawings for correct positioning of setting blocks.
2. Cut glazing gaskets 1/8" (3.2) longer per foot of aluminum member to allow for shrinkage.
3. Install interior gaskets into wall jambs, horizontals, head and sill members.
4. Set lower glass onto setting blocks, **holding 3/8" (9.5) joints between lites.**
5. Hold glass in place with temporary retainers. **See DETAIL O**.
   Use one retainer for every 150 lbs. (667.2 N) of load.
   I.E. If GLASS HEIGHT x GLASS WIDTH x WINDLOAD = 350 lbs. (1556.9 N) use three temporary retainers.

NOTE: ALL STRUCTURAL SILICONE SEALANTS REQUIRE TESTING AND APPROVAL

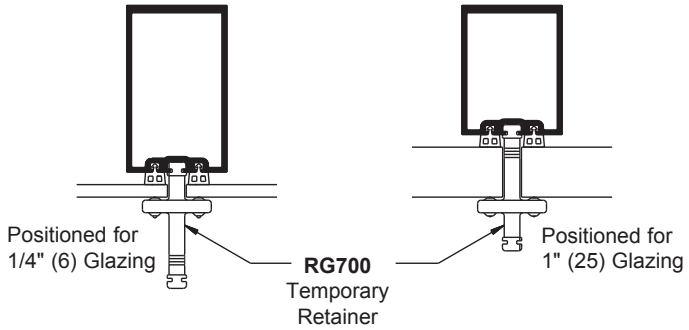

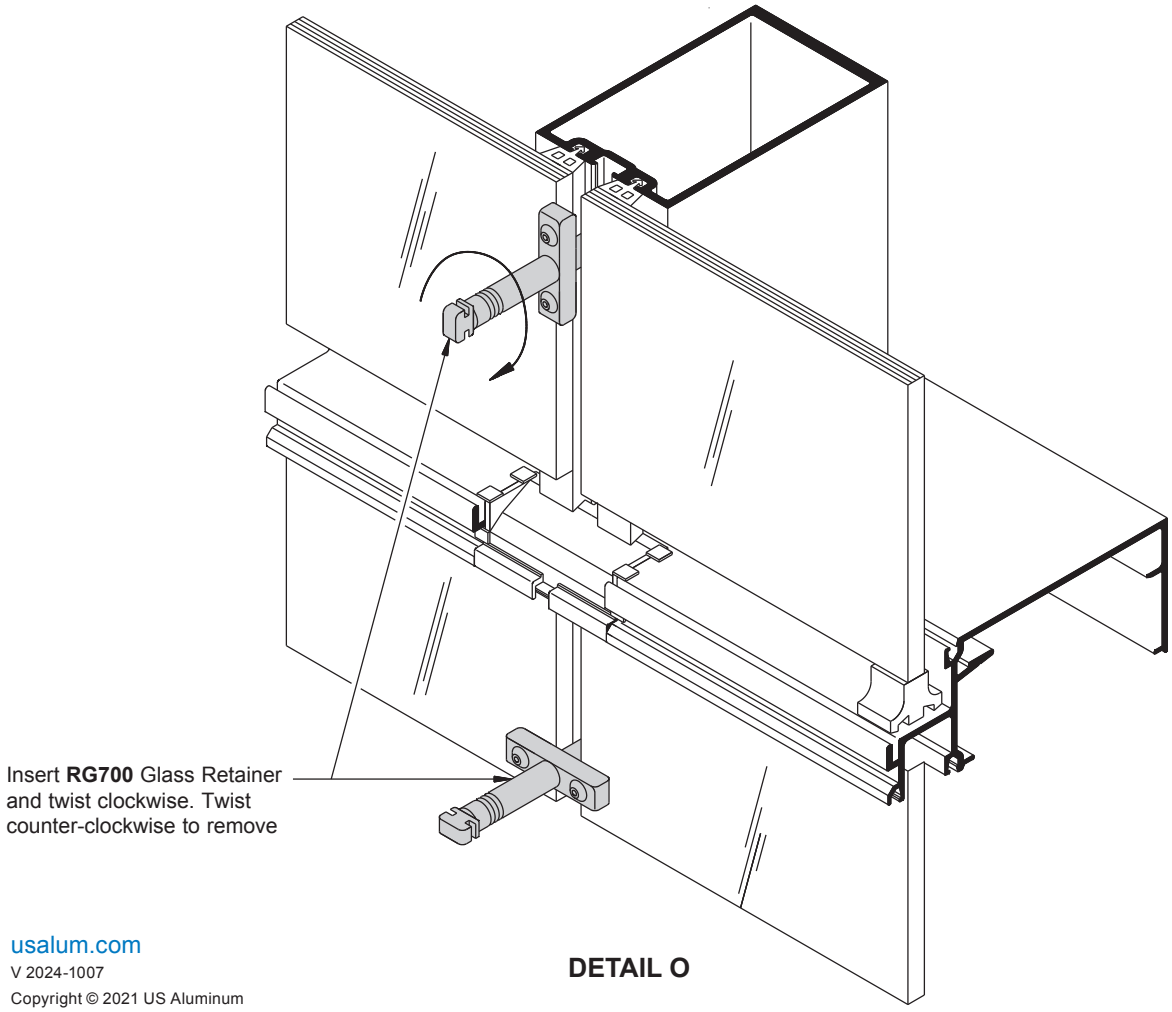

DETAIL O

STRUCTURAL SILICONE GLAZING (CONTINUED)

6. Install head, sill and horizontal exterior faces. **NOTE:** Head face requires the use of **NC539** Clips at 48" (1.22 m) on center maximum. **See DETAIL P**.
   Exterior faces run through and should be spliced as required. See page 22.

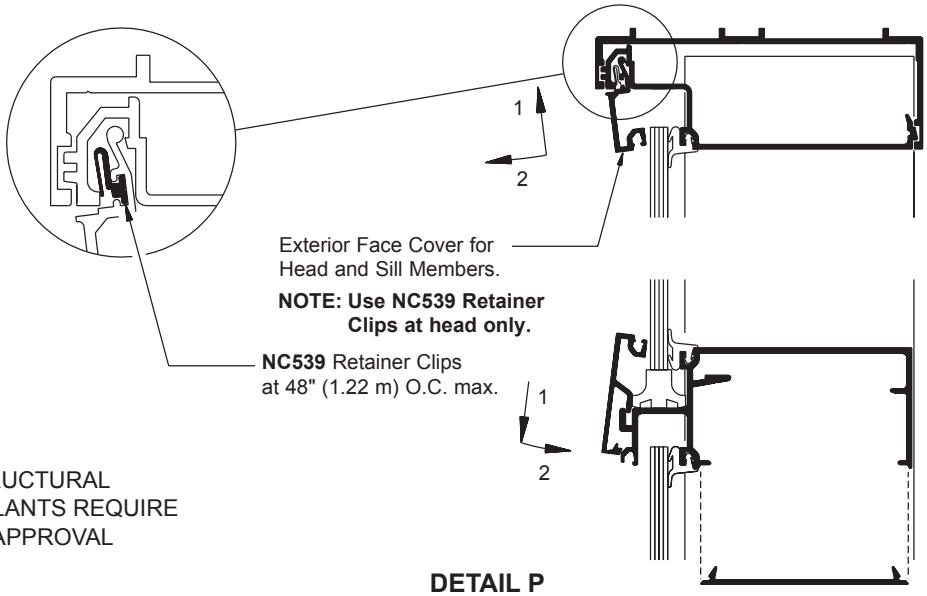

NOTE: ALL STRUCTURAL SILICONE SEALANTS REQUIRE TESTING AND APPROVAL

DETAIL P

7. Use pieces of exterior gasket to temporarily hold glass tight against interior gaskets. **See DETAIL Q**.

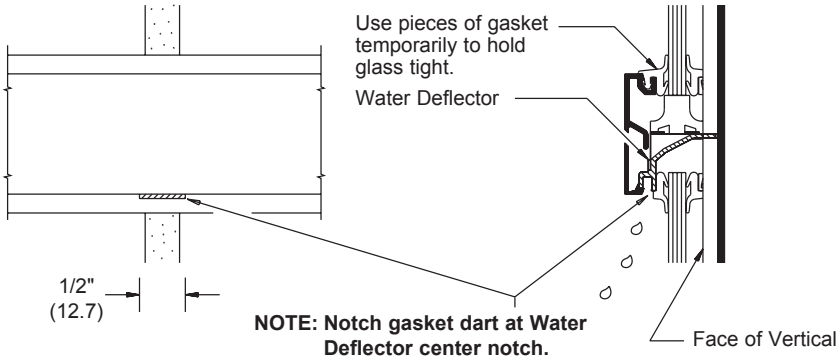

DETAIL Q

Structural silicone is applied from the interior. **Follow silicone manufacturer's instructions and recommendations for surface preparation and silicone application.**

8. Mask face of glass and aluminum adjacent to silicone glazing joint.
9. Apply silicone making sure it completely fills the space behind the glass. Air pockets or voids are not acceptable.
10. Remove masking tape right after tooling, before skin cure begins.
    Do not remove temporary retainers until silicone has completely cured.
11. After structural silicone has fully cured remove temporary retainers, insert open cell polyurethane rod between glass edges, mask glass and aluminum adjacent to joint, and then apply exterior weatherseal.
12. Install exterior gaskets after removing temporary pieces. Horizontal gaskets run through. Start at corners and work toward center. Tight butt joined corners are critical to avoid leakage.

    NOTE: On bottom side of intermediate horizontal notch the dart of the glazing gasket at center of verticals to create a 1/2" (12.7) wide weep slot. See DETAIL Q.

STRUCTURAL SILICONE GLAZING (CONTINUED)

HORIZONTAL EXPANSION JOINTS

EXTERIOR FACE SPLICE JOINTS FOR SERIES OS175SG, OS451SG and OS601SG.

Head and sill faces should be spliced at a different point than head and sill channels.
Silicone end caps to edge of sill faces. **See DETAIL R**. Leave required gap between adjacent pieces.
Insert backer rod between end caps to facilitate joint sealing.

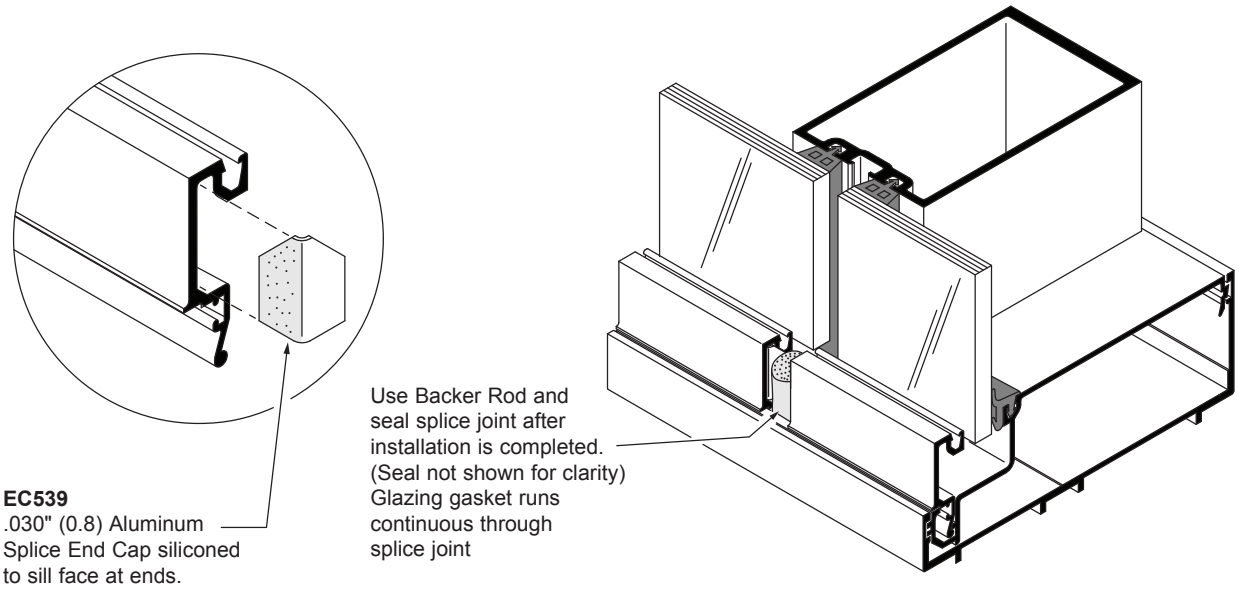

DETAIL R

Intermediate horizontal exterior faces should be spliced every three bays or 15' (4.5 m) maximum for easier installation. Align splice with structural silicone joint. **See DETAIL S**.

NOTE: ALL STRUCTURAL SILICONE SEALANTS REQUIRE TESTING AND APPROVAL

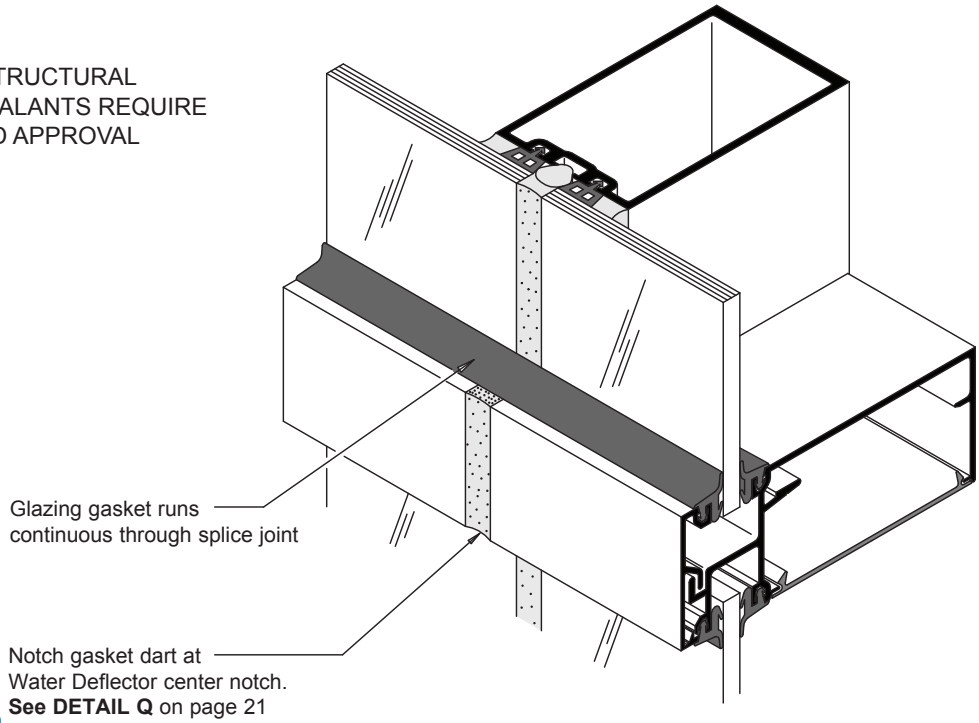

DETAIL S

HORIZONTAL EXPANSION JOINTS

Elevations exceeding 24' (7.32 m) in width require Silicone Splice Sleeves to accommodate thermal movement. Joints width should be calculated according to job conditions and architectural specifications.

Linear expansion for aluminum, in inches = Length (") x F° difference in temperature x .0000129
Linear expansion for aluminum, in millimeters = Length (m) x C° difference in temperature x .02322

Locate splice joints near center of D.L.O. Elongate holes for installation fasteners at head and sill channels to allow for thermal movement. **Pin head and sill channels at one point only per cut length.** (This hole is not elongated)

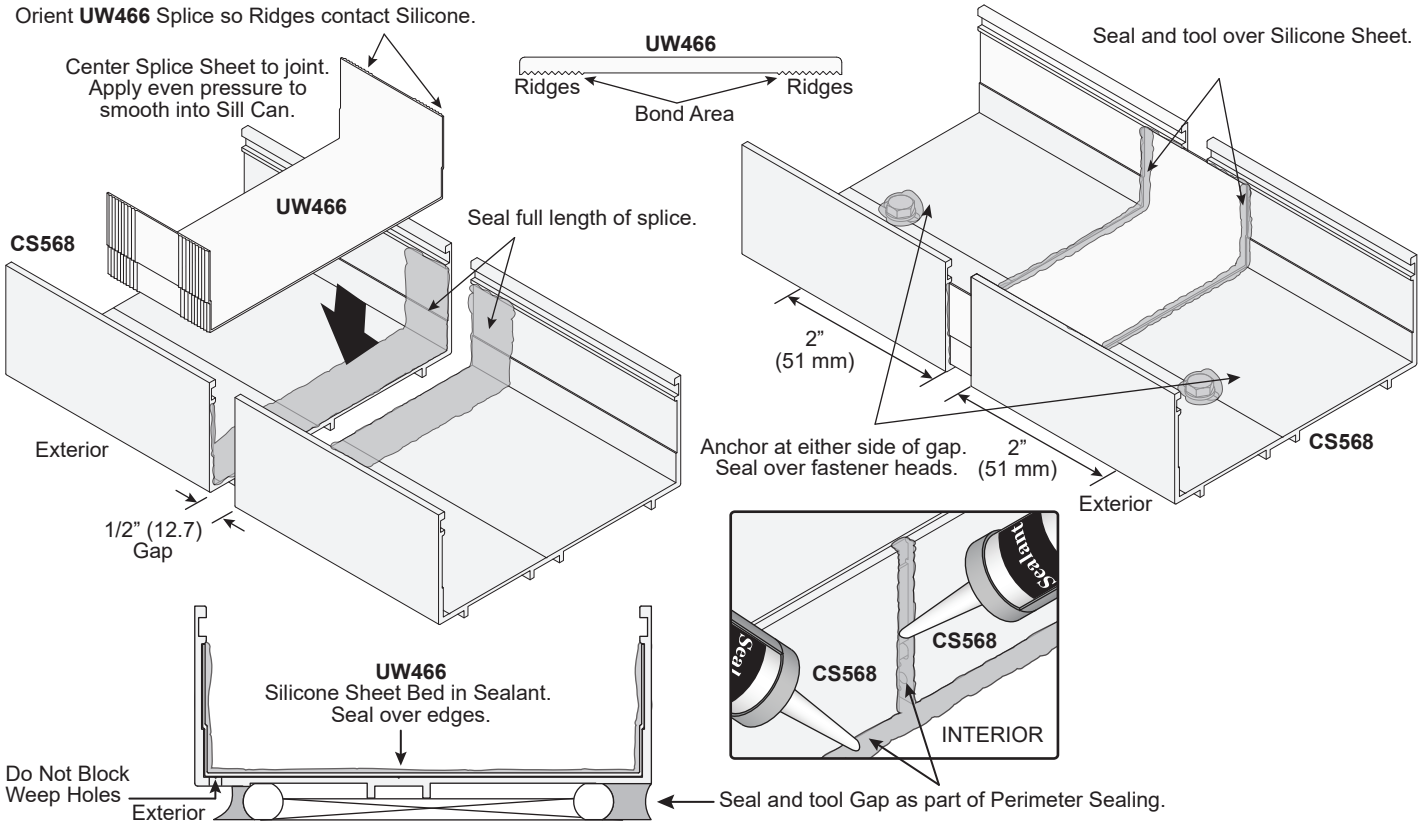

NOTE: Sill Channel for Interior Glazing Shown.
Head Channel for Interior Glazing and Head and Sill Channels for Exterior Glazing Similar.

DETAIL T

Two-piece expansion verticals are recommended for long run elevations with intermediate horizontals.

Their location should be determined according to job conditions and architectural specifications.

NOTE: If verticals need to be secured at top and bottom (see step 5, page 12) two-piece expansion verticals must be used near splice joints. **See DETAIL U**. Two-piece verticals allow for 3/8" (9.5) maximum movement.

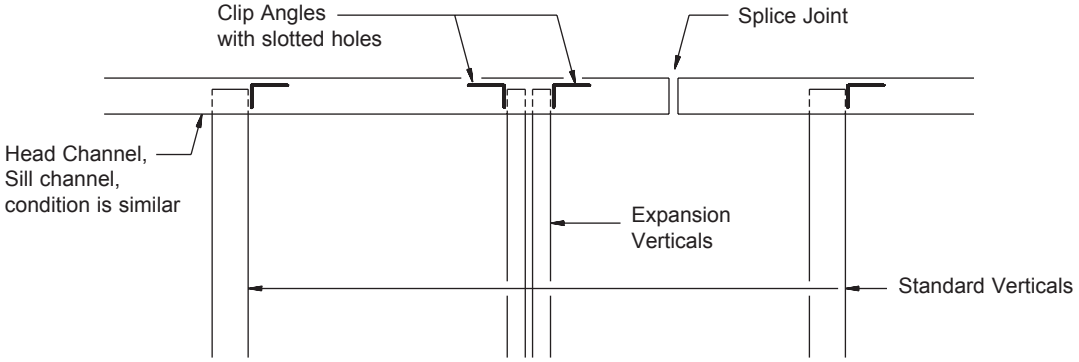

DETAIL U

TRANSITION GLAZING

Vertical adaptors run through. Adaptors for intermediate verticals are screw applied. Run a bead of sealant in vertical member or in the back of adaptor before setting it in place. **See DETAIL V**.

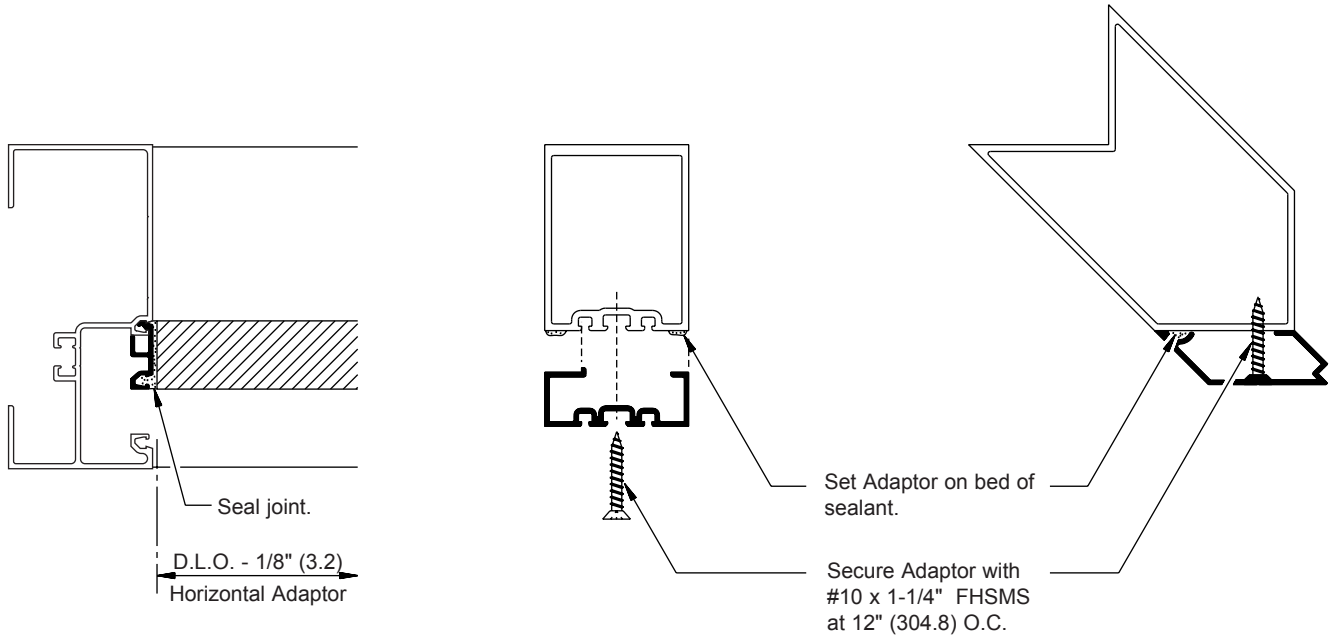

DETAIL V

Horizontal adaptors run between Verticals. Roll-in adaptors need to be installed when setting glass and held in place temporarily with a piece of gasket. When inside access is not possible the adaptor on the bottom of the Horizontal may be held in place with a bead of silicone. Glazing beads for 1/4" (6) spandrel are used for interior glazing applications. **See DETAIL W**.

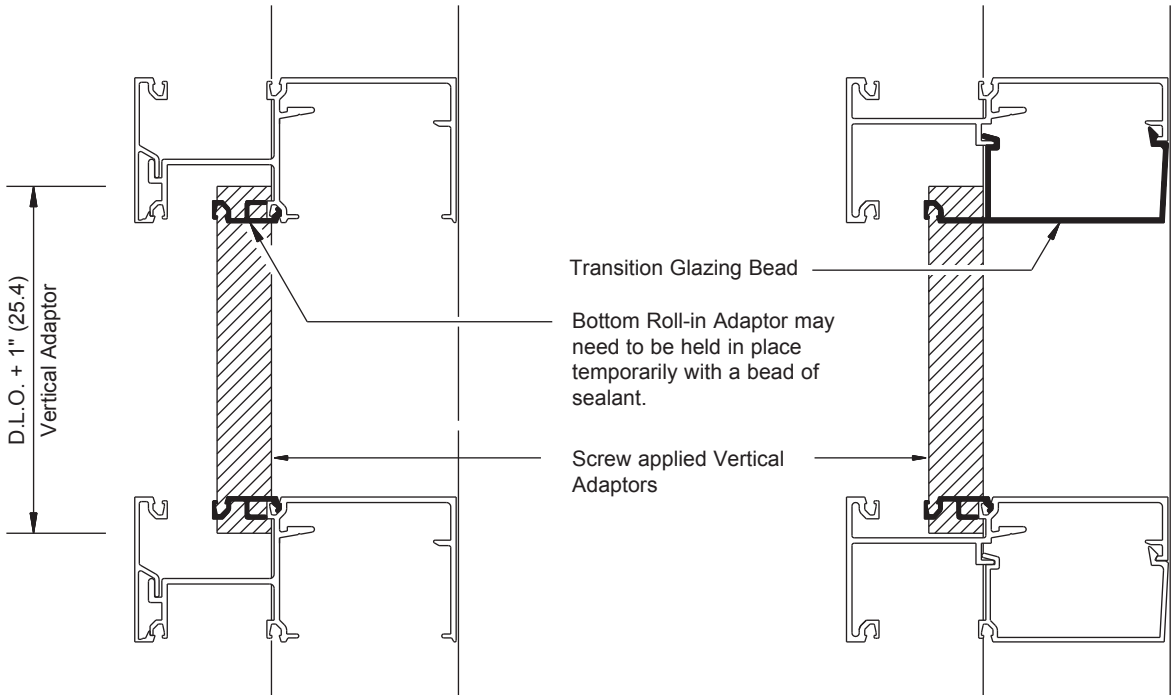

DETAIL W

CORNER CONDITIONS

Head and sill channels should be mitered as required.
Corner members should be cut the same length as intermediate verticals.
Head and sill channel **must be pinned to structure on both sides of corner**, to prevent movement at mitered joint. (Do not elongate the hole where it is pinned).
Elevations with corners at both ends may require a splice joint to accommodate thermal movement. **See DETAIL X**.

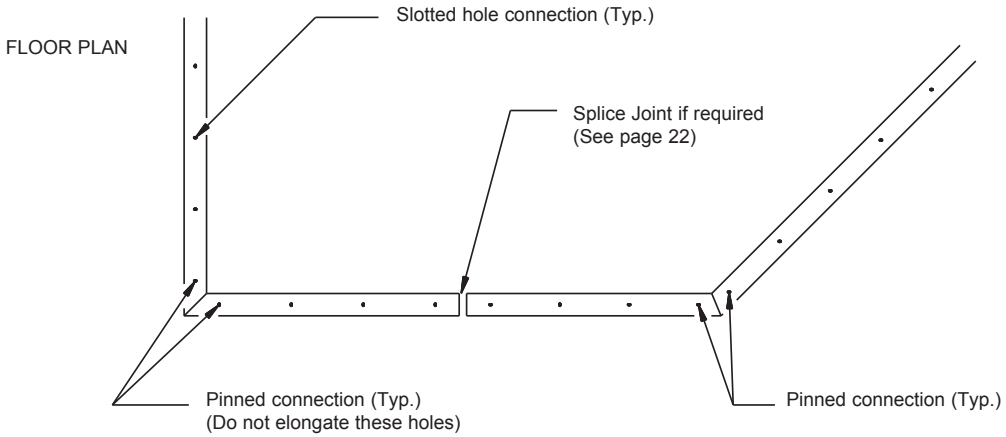

DETAIL X

1. Install mitered head and sill channels in place and secure them to structure. **See DETAIL Y.**
   NOTE: 90° INSIDE and OUTSIDE CORNERS and 135° CORNERS for SERIES OS451 and OS601SG require special installation sequence.
   See page 26 and **DETAILS AA and BB**.
2. Seal joint thoroughly. **See DETAIL Y**.

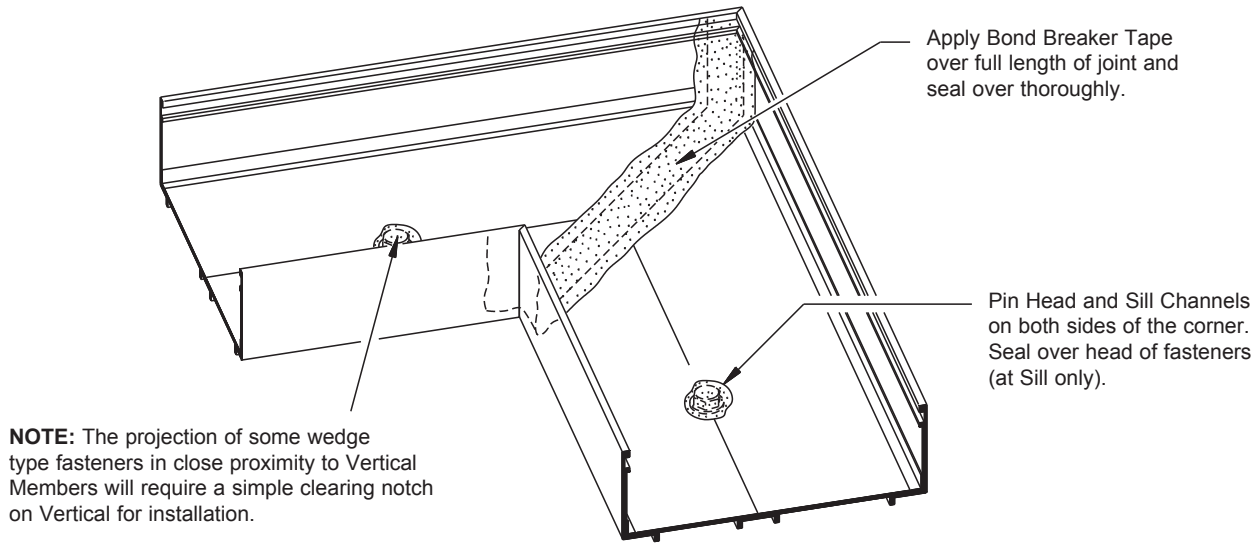

DETAIL Y

3. Install corner components. Corner components should be installed before adjacent head and sill fillers are snapped-in. Components may be snapped together and install as a unit. INSIDE CORNER components should be fastened together with #10 screws every 24" (609.6) O.C. **See DETAIL Z**.

CORNER CONDITIONS (CONTINUED)

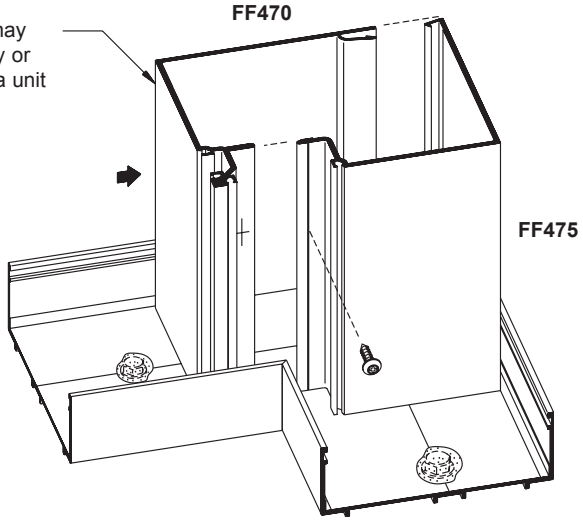

DETAIL Z
90° INSIDE CORNER
(Screw joined at one corner)
90° OUTSIDE CORNER
(Snap joined at both corners, not shown)

90° INSIDE and OUTSIDE CORNERS and 135° CORNERS for SERIES OS451 and OS601.
OPTIONAL: These corners may be PREASSEMBLED and installed as a unit, to avoid blind sealing of mitered joint. Attach corner members to preassembled head/sill corner components with clip angles at both sides of vertical.

SPECIAL INSTALLATION SEQUENCE for FIELD ASSEMBLY

1. Install head and sill channels on one side of corner only and secure to structure.
2. Apply sealant to mitered edge.
3. Set corner member in place.
4. Butter mitered edge of head and sill channels with sealant for the other side and install tight against previously installed half. Seal over head of fasteners.

DETAIL AA
90° INSIDE CORNER
90° OUTSIDE CORNER (Not shown, similar)

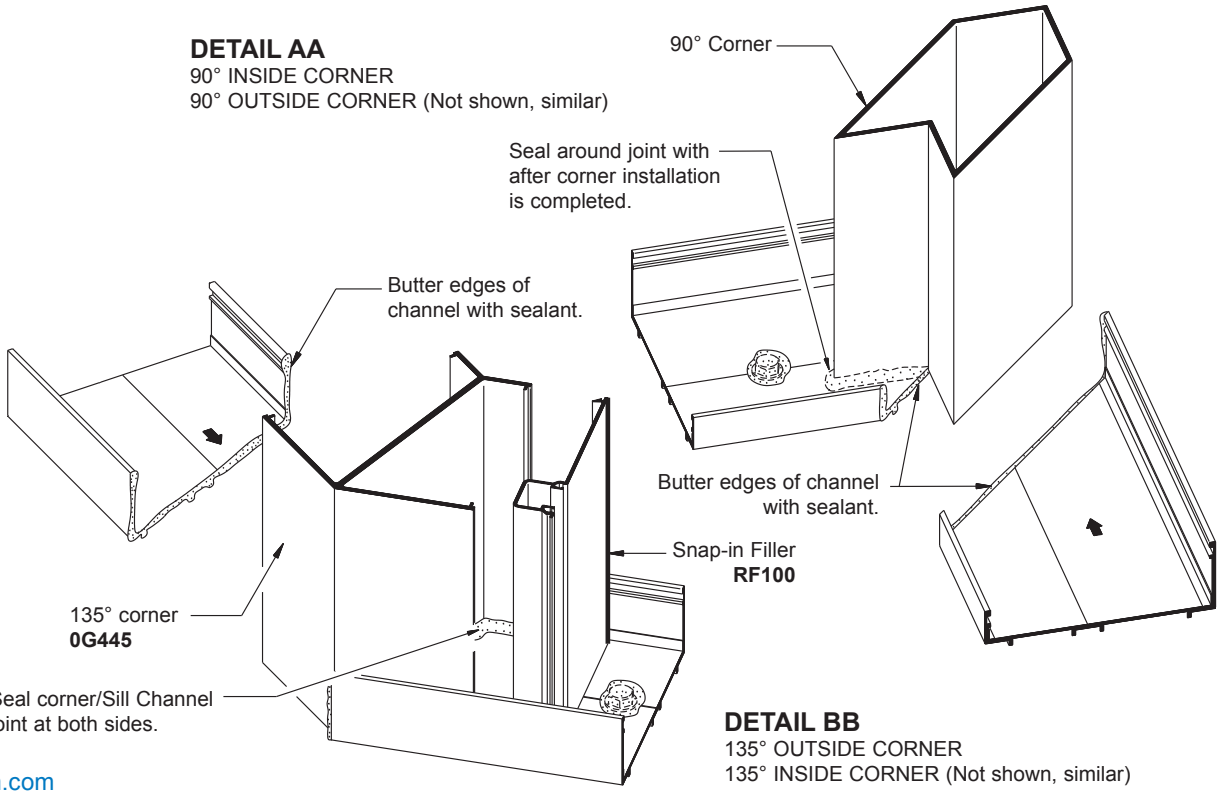

DETAIL BB
135° OUTSIDE CORNER
135° INSIDE CORNER (Not shown, similar)

ENTRANCE FRAMES

1. Cut door jambs to FRAME HEIGHT minus 5/8" (15.9). Door jambs run to floor.
   Door jambs must be anchored at top and bottom.
   Sill and head channels are 1/4" (6.4) deeper than vertical members; in conditions where they butt against door jamb, apply sealant to end of channels to cover row edges. **See DETAIL DD**.

   SILL CHANNEL:
   Butts against door jamb. Seal thoroughly around joint. Pin sill channel near door jamb to prevent movement.

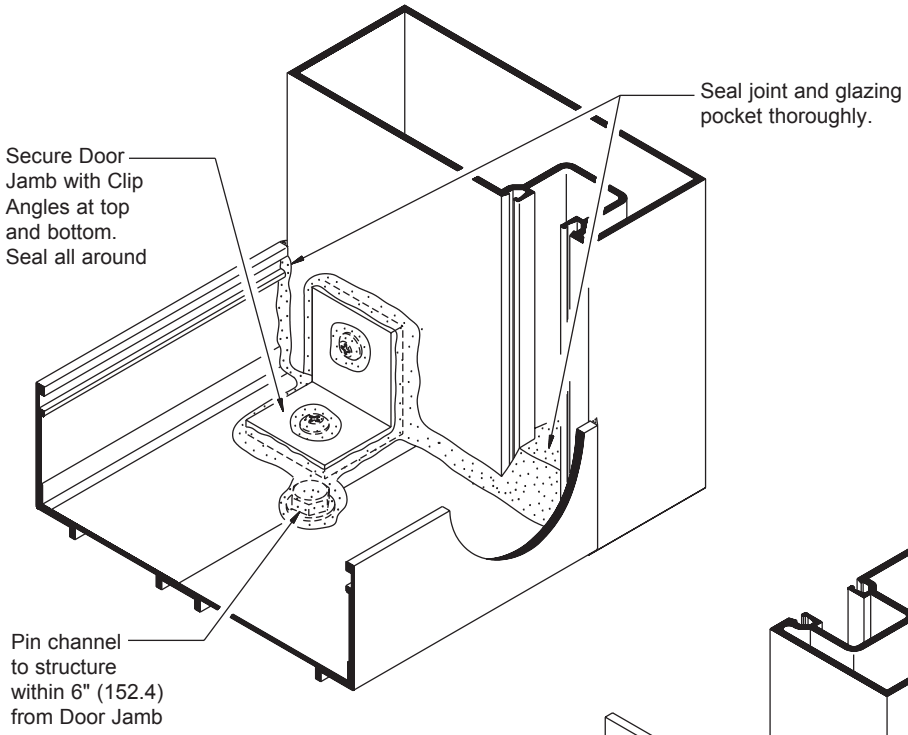

DETAIL CC

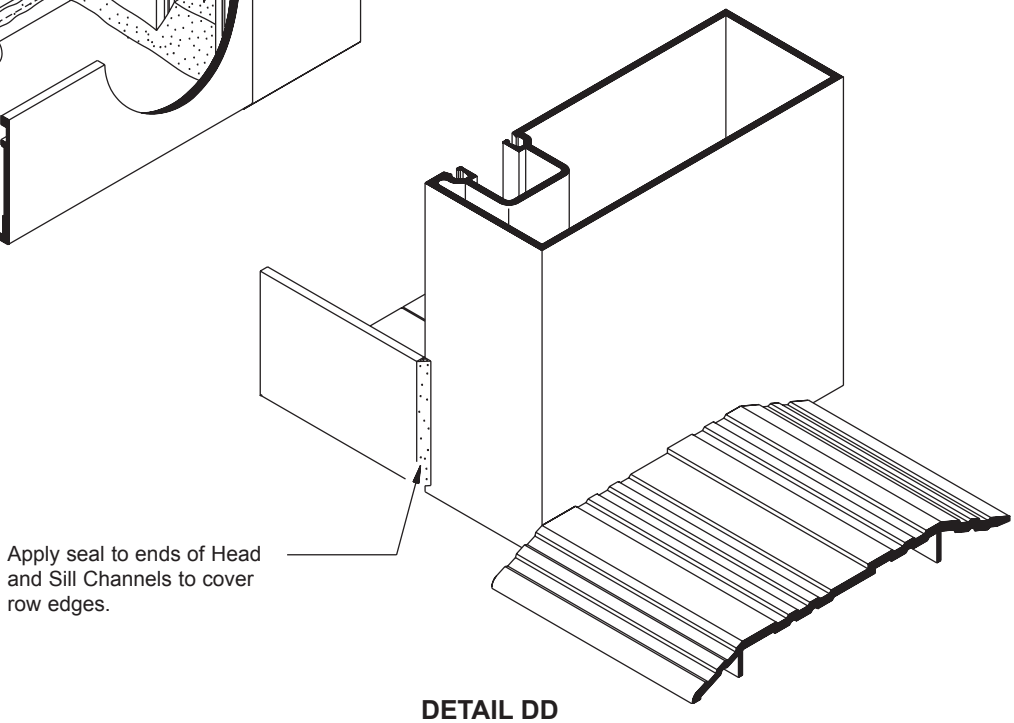

DETAIL DD

HEAD CHANNEL:

Door without transom:	Head channel may run continuous or butt against door jamb. **See DETAIL EE.**
Door with transom:	Head channel runs continuous. **See DETAIL EE.**

Transom glazing requires the use of profiles 1425/1459 for 1/4" (6) glazing or 1425/1M425 for 1" (25) glazing sash at jambs and door header.

ENTRANCE FRAMES (CONTINUED)

DOORS WITHOUT TRANSOM

Condition 1:
Head Channel butts against door frame

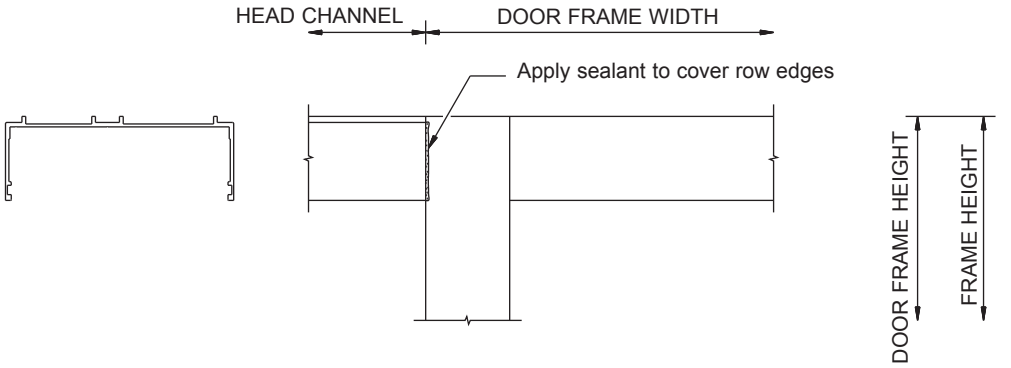

Condition 2:
Head Channel runs continuous

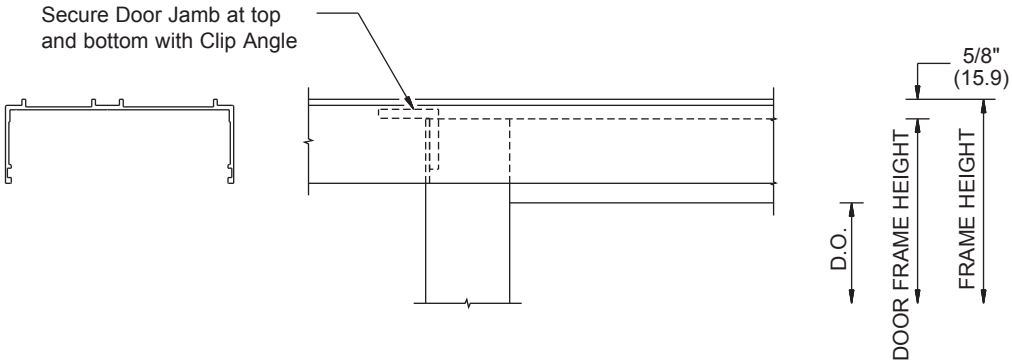

DOORS WITH TRANSOM

Condition 3:
Head Channel runs continuous

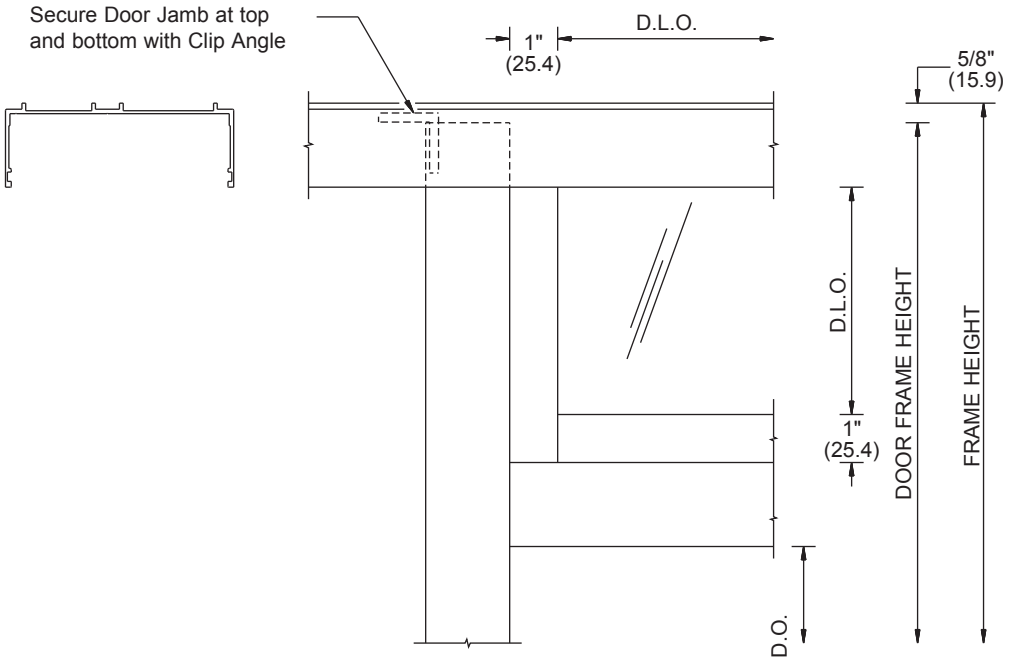

DETAIL EE