FORMULA TABLE FOR CUT-OUT OF RECESS

'R'= T'-.314

EXAMPLE:

'T' = ALUM. MAT'L. THICKNESS OF .125

'R' = .125 - .314

'R' = .189 RECESS CUT-OUT

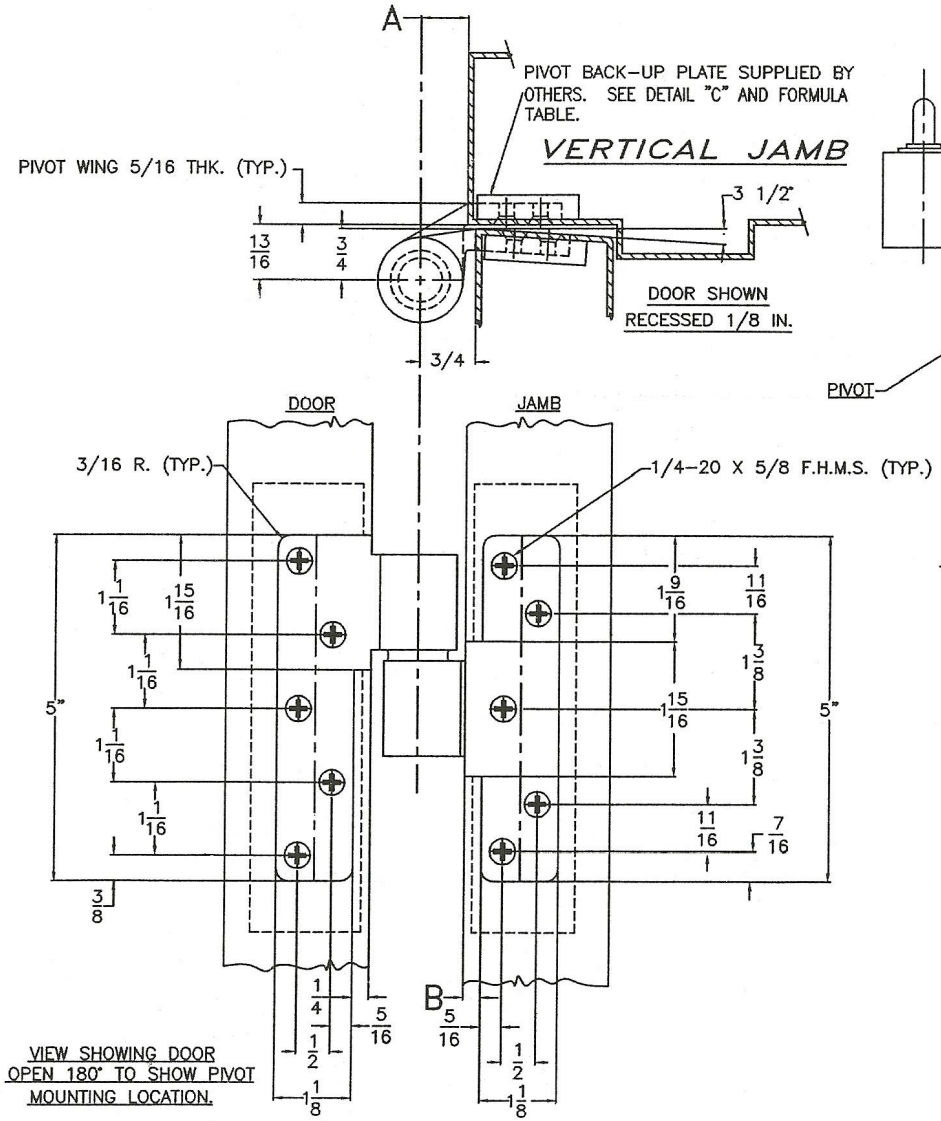

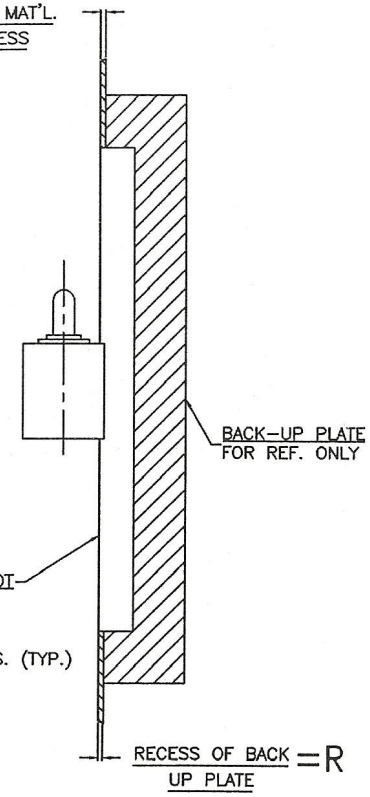

DETAIL C

DIMS.	A	B
DOOR FLUSH TO JAMB.	3/4	1/4
DOOR RECESSED 1/8 INCH.	5/8	3/8

J-190 PIVOT SET
RH/L.H.R.B. SHOWN

C	2/28/98	REDRAWN	ECN1143	RM

DIMENSIONAL TOLERANCES UNLESS OTHERWISE SPECIFIED
DECIMAL DIMENSIONS .XX ± .010
DECIMAL DIMENSIONS .XXX ± .005
ANGULAR ± X ° FRACTIONAL ± 1/64

APPROVALS		DATE
APPROVED		
CHECKED		
DRAWN	JJM	2-23-98

SCALE NONE

FILE NO. | MATERIAL
NEXT ASSY. | FINISH
QTY. USED | HEAT TREAT

J-190 INTERMEDIATE PIVOT

jackson CORPORATION
3447 UNION PACIFIC AVE. LOS ANGELES, CALIF. 90023

SHEET X OF X SHEETS
DWG. NO. 10-642 REV. C