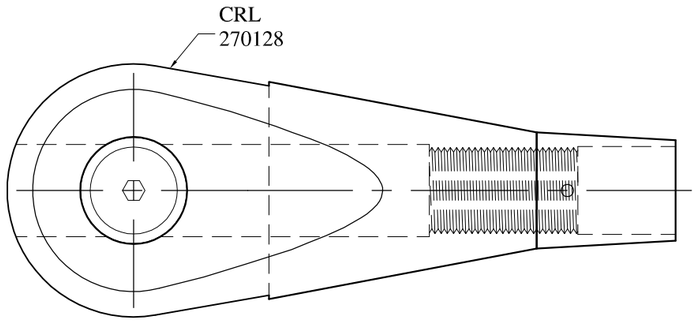

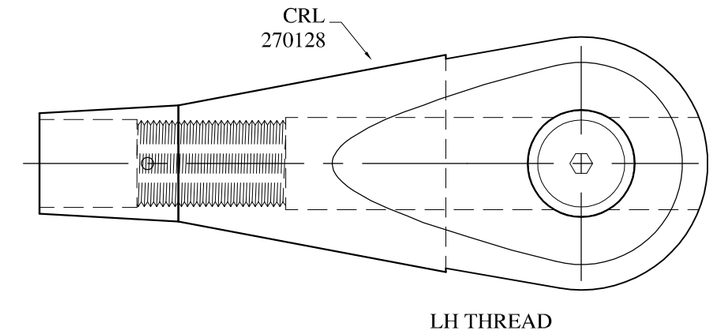

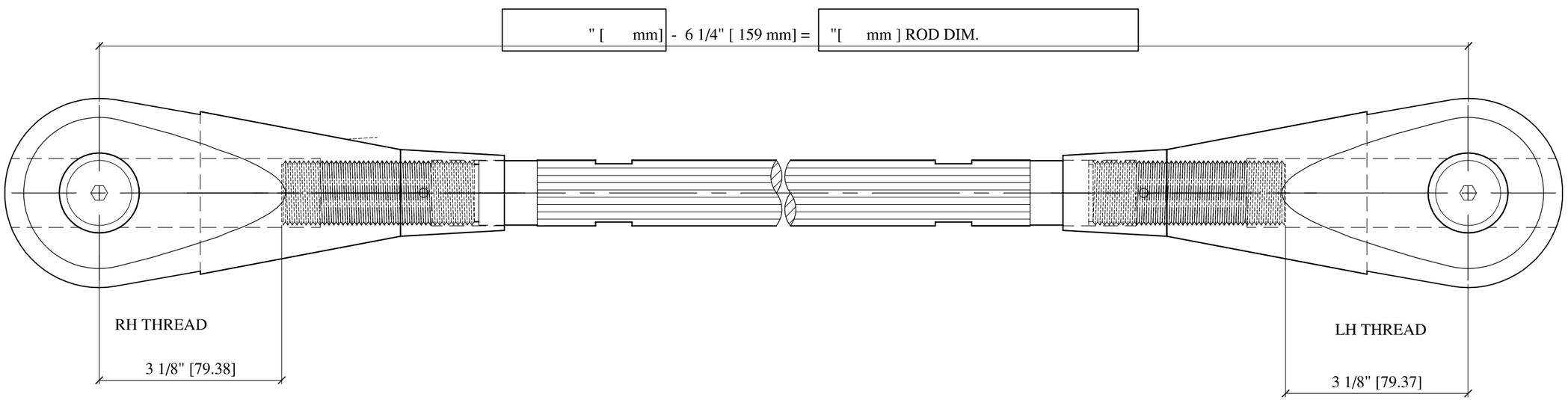

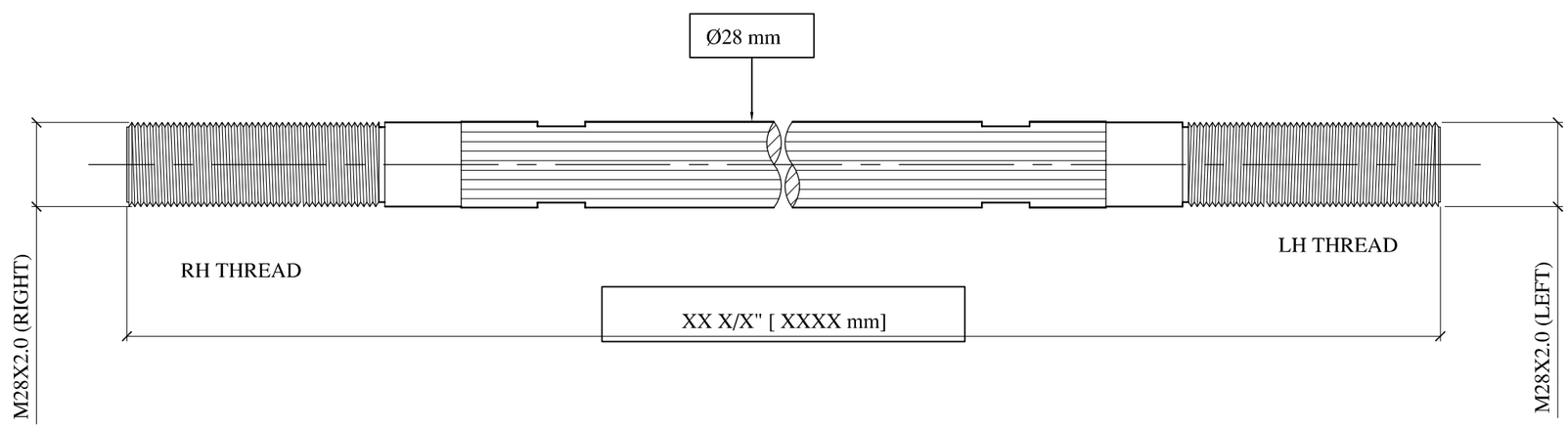

- 28 mm ENDS & ROD

Scale: 1:2

CUSTOMER SIGNATURE: X

DATE:

REVISIONS

C.R.LAURENCE CO.
ARCHITECTURAL PRODUCTS

2503 E. Vernon Avenue, Los Angeles, CA 90058
Phone: 800-421-6144 Fax: 800-262-3299
www.crlaurence.com

Job Name: 270128CR

Glazing Contractor:

DATE:	04-28-08
DRAWN BY:	JRM
CHECKED BY:	
SCALE:	1:2
JOB #:	--------

SHT 1 OF __