1/4" (6mm) GLASS:	
5/16" (8mm) GLASS:	

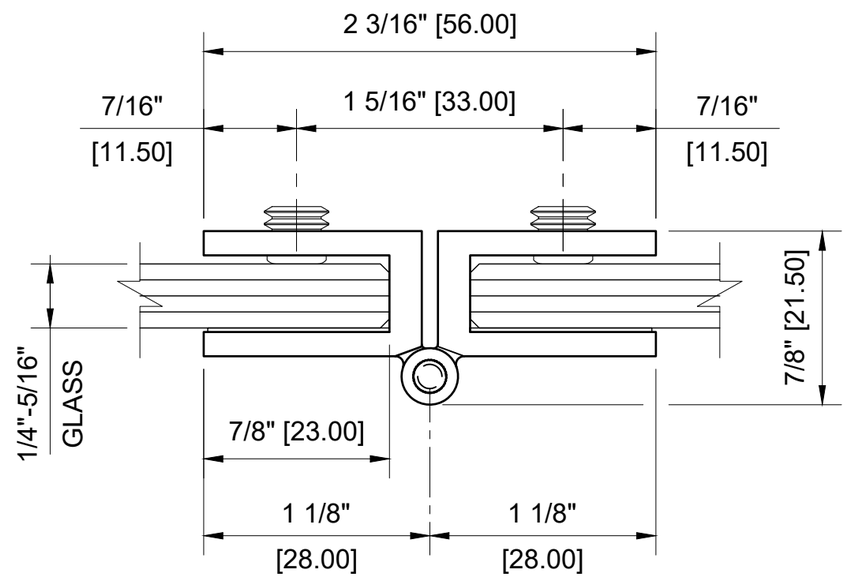

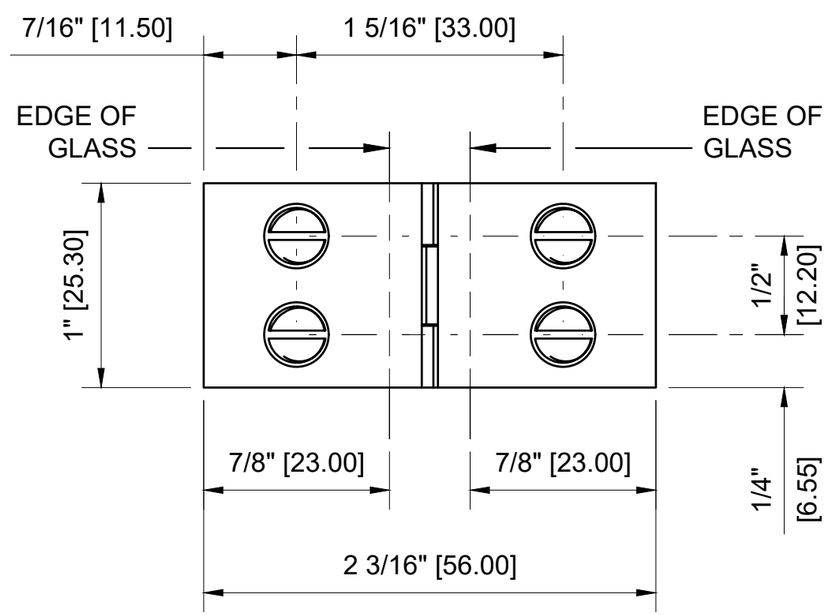

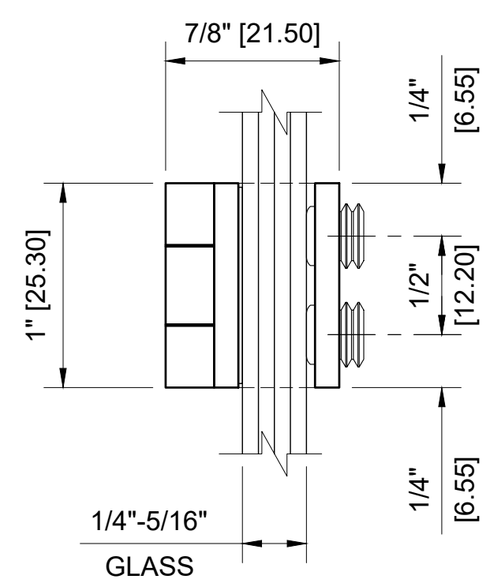

CRL - EH162 WIDE FACE GLASS TO GLASS OUT-SWING HINGE FOR 1/4" - 5/16" GLASS

DATE:	5-29-2020
SCALE:	1'-0"=1'-0"
DRAWN BY:	VM
DESCRIPTION:	CRL - EH162 BRASS 1" WIDE FACE GLASS TO GLASS OUT-SWING SET SCREW HINGE

CRL
C.R.LAURENCE CO. ARCHITECTURAL PRODUCTS
2503 E. Vernon Avenue, Los Angeles, C.A 90058-1897
PH (800)-421-6144 FX: 800-587-7501 www. crlaurence.com