5/16" (8mm) GLASS:	
1/4" (6mm) GLASS:	

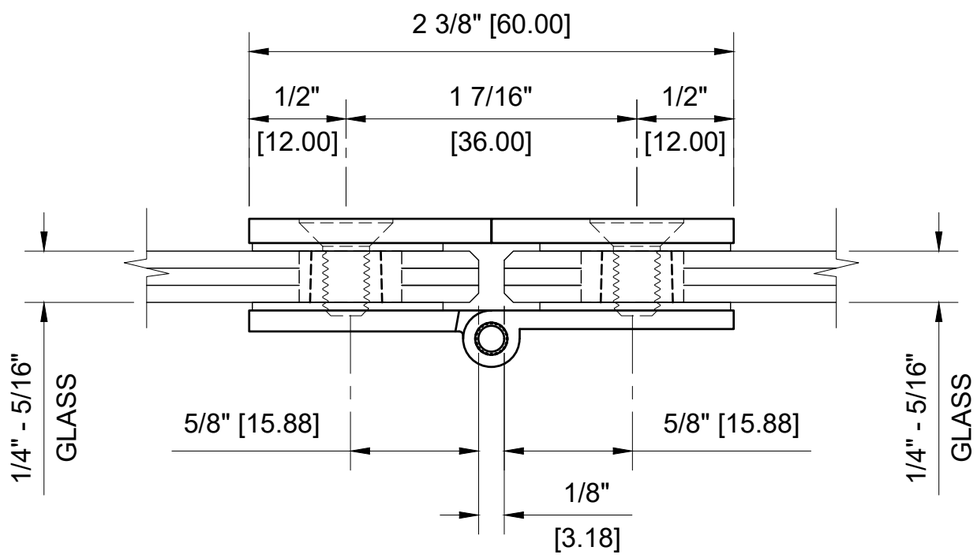

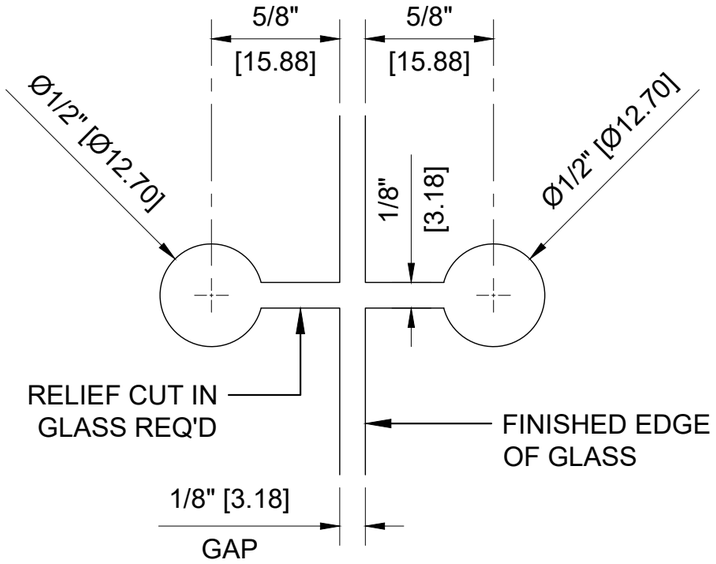

GLASS FABRICATION TEMPLATE

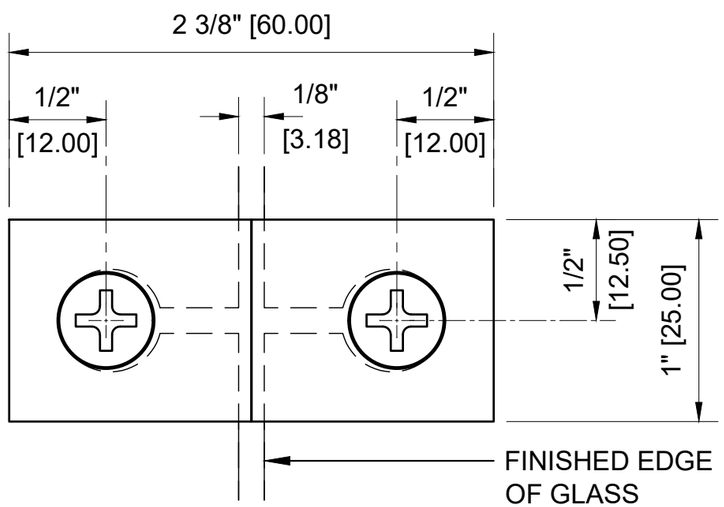

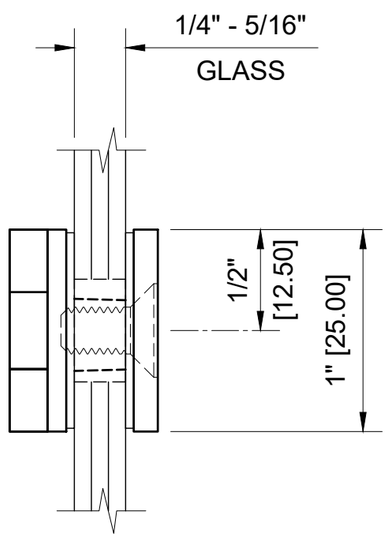

CRL - EH248 DOUBLE GLASS TO GLASS 90 DEGREE RETURN SHOWCASE HINGE FOR 1/4" - 5/16" GLASS

DATE:	9-10-2020
SCALE:	1'-0"=1'-0"
DRAWN BY:	VM

DESCRIPTION:
CRL - EH248 BRASS
1-3/16" GLASS TO GLASS INLINE HINGE

CRL.
C.R.LAURENCE CO. ARCHITECTURAL PRODUCTS
2503 E. Vernon Avenue, Los Angeles, C.A 90058-1897
PH (800)-421-6144 FX: 800-587-7501 www. crlaurence.com