CONSTRUCTION CONSULTING LABORATORY, *INTERNATIONAL*

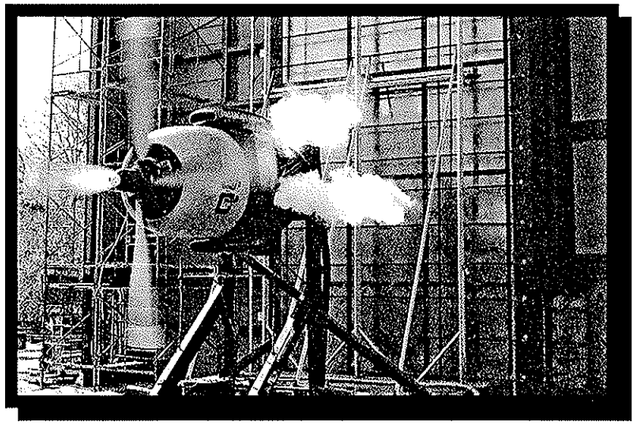

TEST REPORT:

AAMA PERFORMANCE TEST
U.S. ALUMINUM SERIES 7500 ALUMINUM CASEMENT WINDOW
REPORT #CCLI-03-082

August 19, 2003

Prepared for:

UNITED STATES ALUMINUM CORPORATION
200 Singleton Drive
Waxahachie, TX 75165

1601 Luna Road
Carrollton, Texas 75006

S-UNITED, INC.
A Quality Control Company

Office: (972) 242-0556
FAX: (972) 245-6047

TABLE OF CONTENTS

1. PROJECT DATA 1

2. INTRODUCTION 2

3. SCOPE 2

4. SUMMARY 2

5. TEST SPECIMEN 2

6. PERFORMANCE RESULTS 4

7. CONCLUSION 5

APPENDIXES

APPENDIX A: U.S. ALUMINUM SERIES 7500 ALUMINUM CASEMENT WINDOW DRAWINGS

1. PROJECT DATA

Project:	AAMA Performance Test Series 7500 Aluminum Casement Window
Date of Testing:	April 27, 2003
Tested For:	U.S. Aluminum 200 Singleton Drive Waxahachie, TX 75165

Witnessed By:	(All or Partial Viewing)
Michael Brown	U.S. Aluminum
Terry Hopgood	U.S. Aluminum
Jeffrey Crump	Construction Consulting Laboratory, *International*

2. INTRODUCTION

This report presents the performance results of a U.S. Aluminum Series 7500 Aluminum Casement Window. Tests were conducted at the U.S. Aluminum testing facility in Waxahachie, TX.

3. SCOPE

Construction Consulting Laboratory, *International* (**CCLI**) was requested to witness and report the testing results of U.S. Aluminum Series 7500 Aluminum Casement Window. Tests were performed in accordance with ANSI/AAMA/NWWDA 101-I.S.2-97 test specification.

4. SUMMARY

The U.S. Aluminum Series 7500 Aluminum Casement Window was tested in accordance with ANSI/AAMA/NWWDA 101-I.S.2-97 test specifications and achieved a Commercial Design C-C75 classification.

5. TEST SPECIMEN

Product Type:	Aluminum Casement Window, **Product Drawings, Appendix A**
Series Model:	U.S. Aluminum Series 7500
Publication No:	ANSI/AAMA/NWWDA 101-I.S.2-97 C-C75 30 x 60
Frame Size:	2'-6" x 5'-0"
Vent Size:	2-5 13/16" x 4-11¾ "
Frame Depth:	1.2"
Configuration:	X

Refer to mock-up drawings in **Appendix A**. This report is not complete unless this laboratory symbol is stamped onto drawings.

Construction Consulting
Laboratory, International
1601 Luna Road
Carrollton, Texas 75006
Phone (972) 242-0556
Report # 03082 Reviewed By
Date: 8/19/03

Weather-Stripping: 3/16" dual durometer located full perimeter at frame interior leg exterior face full perimeter. 3/16" dual durometer located at interior face of exterior leg full perimeter of vent. Continuous gasket (part #NP075) located at the exterior face of vent perimeter.

Hardware: One (1) cam lock located 6¾" from each end of vent stile total of two (2). Lock keepers located 7¾" from each end of frame jamb. Locks attached with two (2) #10–24 x ½" screws. Keepers attached with two (2) #10–24 x 3/8" screws. Four bar friction hinge (part #WH620) located at frame head and sill.

Glass: 1" overall thickness sealed insulating glass: 2 pcs. ¼" annealed glass, with ½" air space.

Glazing: Exterior glazed with GT900 glazing tape and silicone bead at interior of glass with continuous gasket at exterior of glass.

Weep Arrangement: Two (2), ¼ " dia. weep holes at ¼ points. (Optional)

Sealant: Narrow joint seam sealer at all frame corners and vent corners. Attachment screws sealed at head.

Reinforcement: None

Installation Features: Test specimen was installed in a nominal (2" x 8") yellow pine wood test buck attached with #12 x 2½" screws spaced 3" from each and 12" on center interior frame head, sill, and jambs.

Other Features: Vent members are thermally broken. Vent corners are mitered and crimped with one aluminum corner key (part #CB506) per connection. Frame members are coped, butted, and attached with two (2) #8 x ¾" PHSMS per connection.

Date testing started: April 27, 2003
Date testing completed: April 27, 2003
Test performed at: U.S. Aluminum testing facility in Waxahachie, TX

6. PERFORMANCE RESULTS

AAMA/NWWDA 101.S.2-97

Specification Paragraph No	Title Of Test	Test Method	Measured	Allowed
2.1.2	Air Infiltration @1.57 PSF	ASTM E 283	0.021 cfm/sf	0.30 cfm/sf

(The tested specimen exceeds the performance levels in ANSI/AAMA/NWWDA 101/I.S.2-97 for air infiltration. Air values were reported at the request of the manufacturer.)

2.1.2	Air Infiltration @6.24 PSF	ASTM E 283	0.05 cfm/sf	0.30 cfm/sf

(The tested specimen exceeds the performance levels in ANSI/AAMA/NWWDA 101/I.S.2-97 for air infiltration. Air values were reported at the request of the manufacturer.)

GATEWAY PERFORMANCE - DESIGN C-C 30

2.1.3	Water Resistance (No Weep Holes) @4.50 PSF	ASTM E 547 & 331	No Leakage	No Leakage
2.1.4.2	Uniform Structural	ASTM E 330-97		
	-Exterior		45.00 PSF	45.00 PSF
	-Interior		45.00 PSF	45.00 PSF
	-Permanent Set		No Measurable Set	0.185"

OPTIONAL PERFORMANCE - DESIGN C-C 75

4.3	Water Resistance (No Weep Holes) @15.00 PSF	ASTM E 547 & 331	No Leakage	No Leakage
4.4.2	Uniform Structural	ASTM E 330		
	-Exterior		112.50 PSF	112.50 PSF
	-Interior		112.50 PSF	112.50 PSF
	-Permanent Set		No Measurable Set	0.185"
2.1.8	Forced Entry Resistance ASTM F 588 Grade 10		No Entry	No Entry
2.2.5.6.1	Vertical Deflection Test		0.138"	0.619"

Detailed extrusion and assembly drawings indicating measured wall thickness and corner construction are on file and were compared to the test sample submitted. These records will be retained at **CCLI** for a period of four years.

7. CONCLUSION

The test specimen, U.S Aluminum Series 7500 Aluminum Casement Window meets the Commercial Window C-C75 performance requirements of the ANSI/AAMA/NWWDA 101 I.S.2-97 test specification. The above results were obtained by using the designated test methods and indicate compliance with the above specification. This report does not constitute certification of this product, which may only be granted by the program administrator.

Respectfully submitted,

CONSTRUCTION CONSULTING LABORATORY, *INTERNATIONAL*

JEFFREY CRUMP
TESTING TECHNICIAN

WESLEY A. WILSON
TESTING MANAGER

APPENDIXES

APPENDIX A

PROJECT DRAWINGS

DRAWING	DIE#	DATE
US Aluminum Series 7500		
Lay Out Drawing & Bill of Materials	2564	03/24/03
US Aluminum Series 7500 Frame Jamb	WN503	05/23/02
US Aluminum Series 7500 Vent Members	WN506	05/23/02
US Aluminum Series 7500 Frame Head and Sill	WN501	05/23/02

USA-2564

NOTES:

1. FABRICATE PER OPERATION DRAWINGS
2. CONSULT TEST REPORT FOR FINAL WINDOW RATING
3. MAX DESIGN LOAD FOR TWO CAM LOCKS AS SHOWN = 50 PSF
4. No SNUBBER REQ'D
5. FOLLOW STANDARD COMMERCIAL WINDOW INSTALLATION INSTRUCTIONS FOR SEALING, ADJUSTMENT AND INSTALLATION OF UNIT

NOTES (B)
This passed the following:
-C75
-15 PSF water
-6.24 PSF air @ .30 CFM
-Two handles
-4-bar hinge
-No snubber

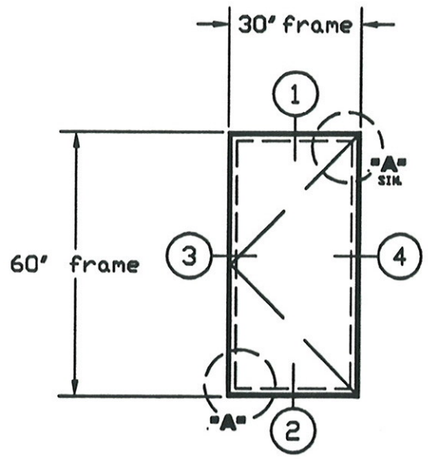

ELEVATION
3/4" = 1'-0"

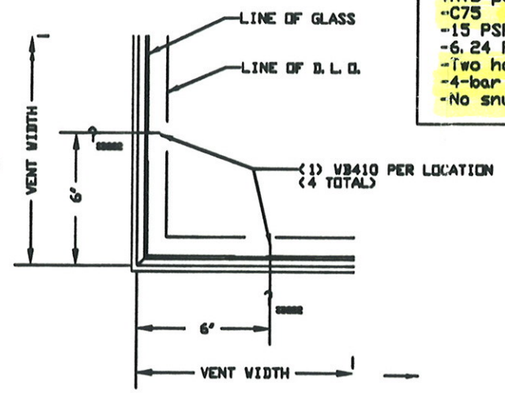

DETAIL "A"
3" = 1'-0"

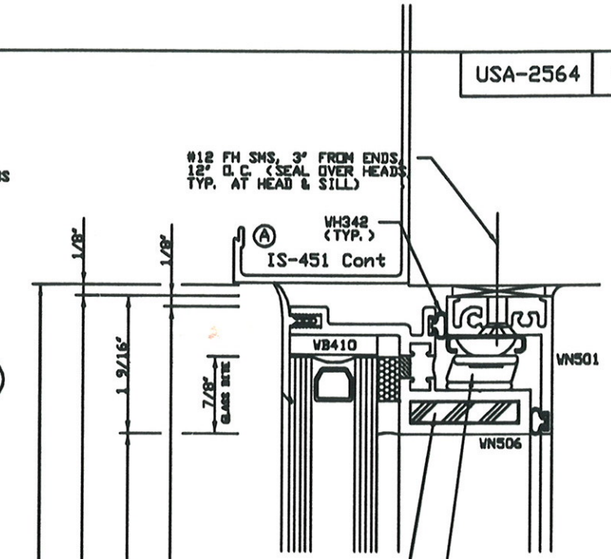

Construction Consulting Laboratory, International
1601 Luna Road
Carrollton, Texas 75006
Phone (972) 242-0556

Report # 03-UB Reviewed By AW
Date: 8-19-03

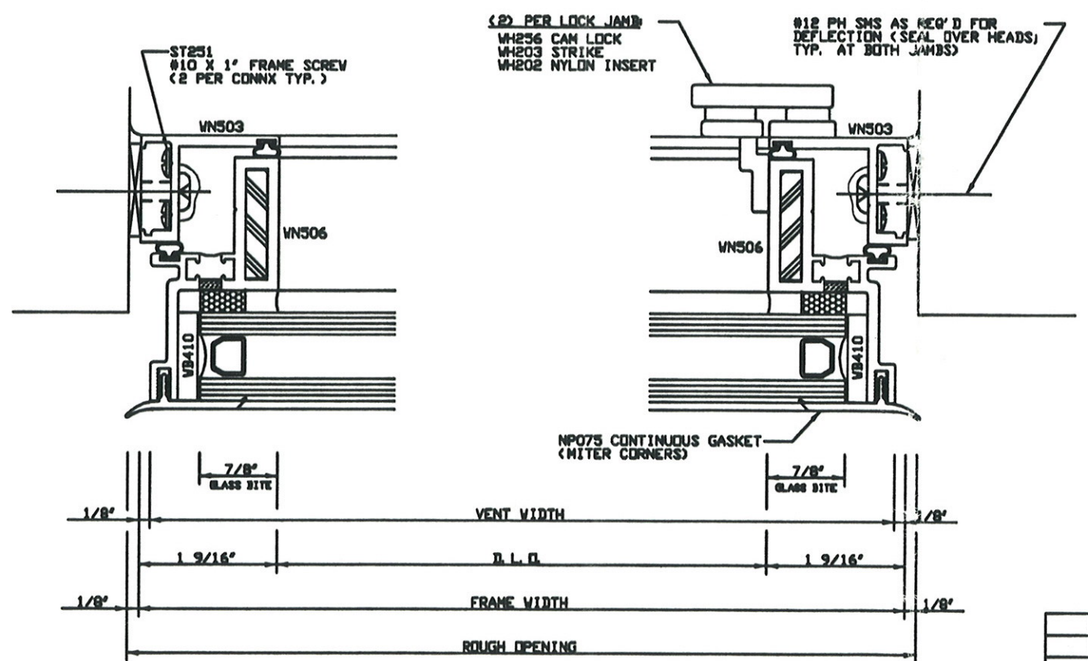

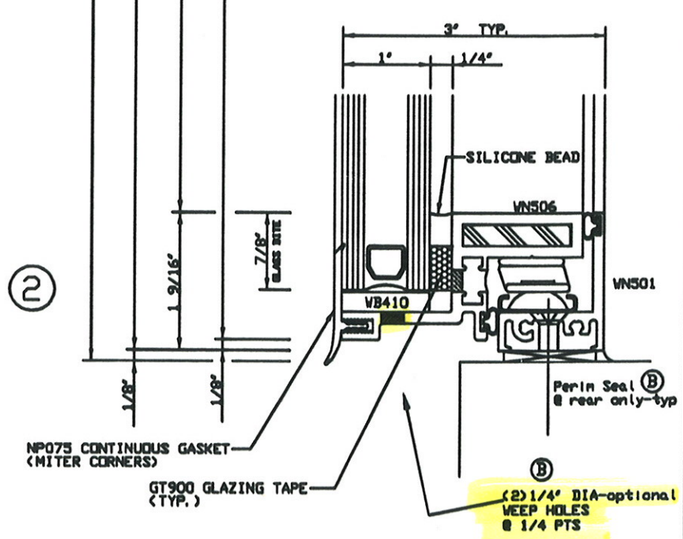

(B)	REVISED PER CCLI	4-29-03	mek	U.S. ALUMINUM CORP.	
(A)	REVISED PER TEST	4-29-03	mek	G. HALL	SERIES 7500 WINDOWS
				03/24/03	PROJECT-OUT CASEMENT
				FULL SIZE	USA-2564

A1	PART # WN503 WAS WN303	RT	09/25 02	U.S. ALUMINUM CORP.		T-60981 A1
				7500 JAMB	PRESTON	05/23/02
				WN503 (A1)	2 X SIZE	

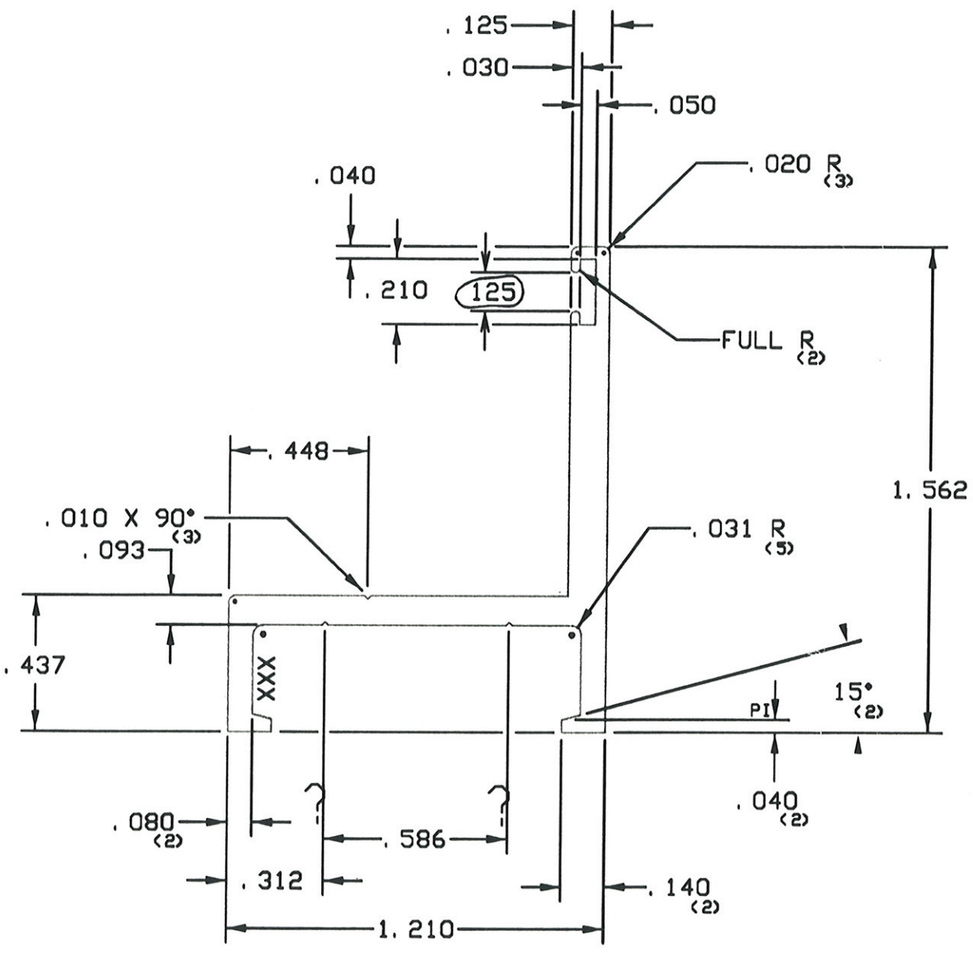

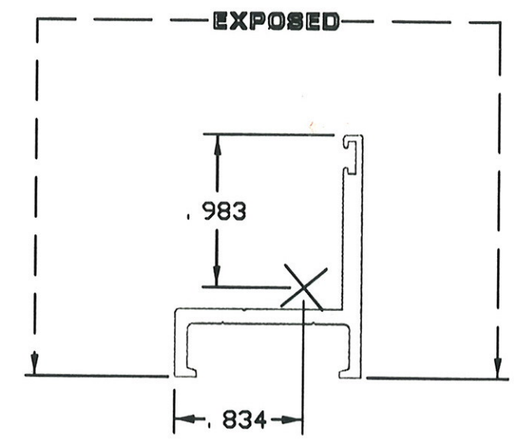

ACTUAL SIZE

Construction Consulting Laboratory, International
1601 Luna Road
Carrollton, Texas 75006
Phone (972) 242-0556
Report # 03080 Reviewed By
Date: 8-19-03

NOTES:

1. 6063-T5 ALLOY AND TEMPER
2. PAINT PERIMETER = 4.621'
3. XXX INDICATES I.D. MARK FOR IEC-TX

SECTION PROPERTIES

Ixx = 0.055 IN^4
Sxx = 0.066 IN^3
Iyy = 0.045 IN^4
Syy = 0.046 IN^3

	.300	C-650	2
	.360	1.968	9 x 60981
	6.720	SOLID	42076
	19	7 68/BARBARA	T-60981 A1

A-1	PART # WN506 WAS WN306	RT	09/25 02	U.S. ALUMINUM CORP.		H-60982 A1
				7500 VENT	PRESTON	05/23/02
				WN506 (A1)	2 X SIZE	

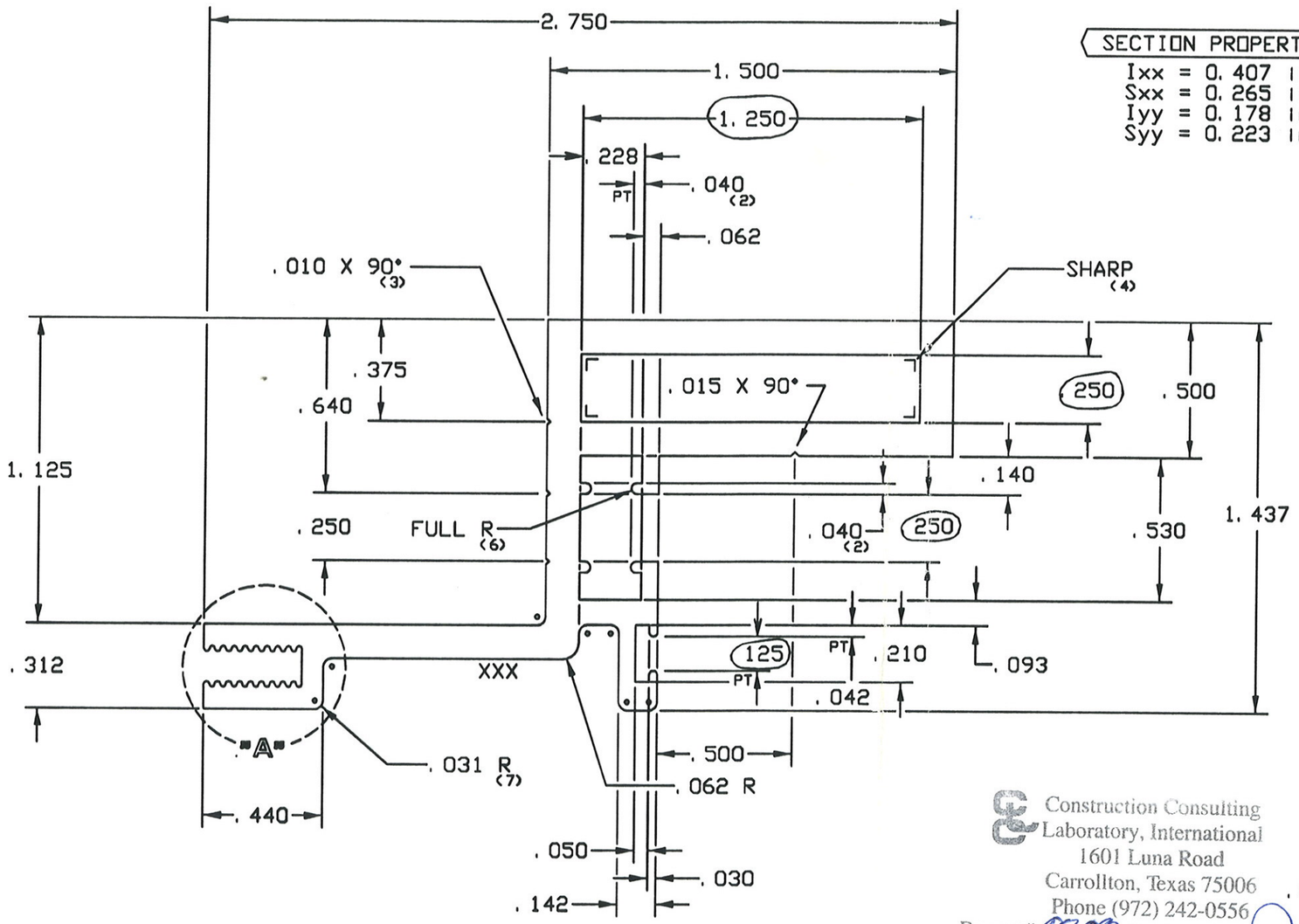

SECTION PROPERTIES

Ixx = 0.407 in⁴
Sxx = 0.265 in³
Iyy = 0.178 in⁴
Syy = 0.223 in³

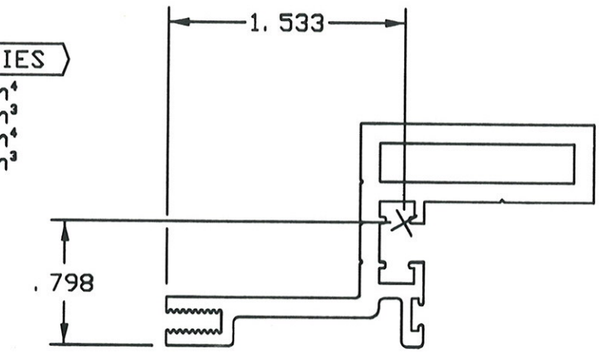

ACTUAL SIZE

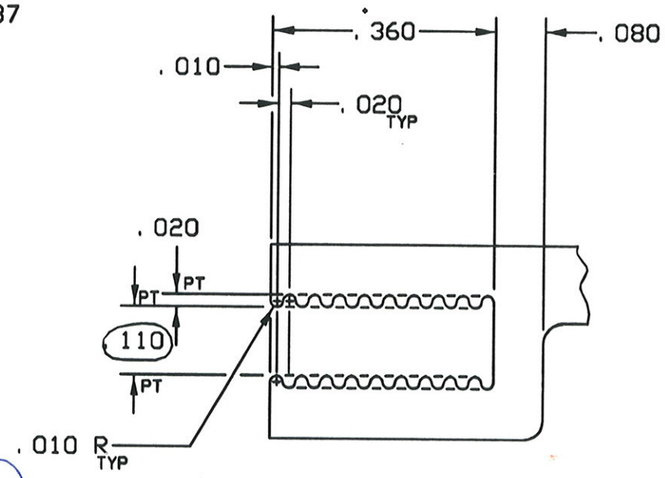

DETAIL "A"
4 X SIZE

Construction Consulting Laboratory, International
1601 Luna Road
Carrollton, Texas 75006
Phone (972) 242-0556
Report # CB08 Reviewed By
Date: 8/1/03

NOTES:
1. 6063-T5 ALLOY AND TEMPER
2. ALL OUTSIDE SURFACES EXPOSED
3. THERMAL DETAIL AREA: .110
4. DEBRIDGE WITH A .218 X .015 MAX PENETRATION INTO THERMAL MATERIAL
5. OUTSIDE PERIMETER = 11.747"
6. PAINT PERIMETER = 11.747"
7. XXX INDICATES I.D. MARK FOR IEC-TX
8. FITS WITH PART# CC304; DIE# 30958

			.125
	.802	C-648	1
	.962	3.103	PORTHOLE 10 x 5.5
	14.747	II HOLLOW	39324
	15	7 51/BARBARA	H-60982 A1

A-1	PART # WN501 WAS WN301	RT	09/25 02	U.S. ALUMINUM CORP.		T-60980 A1
				7500 SILL/HEAD	PRESTON	05/23/02
				WN501 (A1)	2 X SIZE	

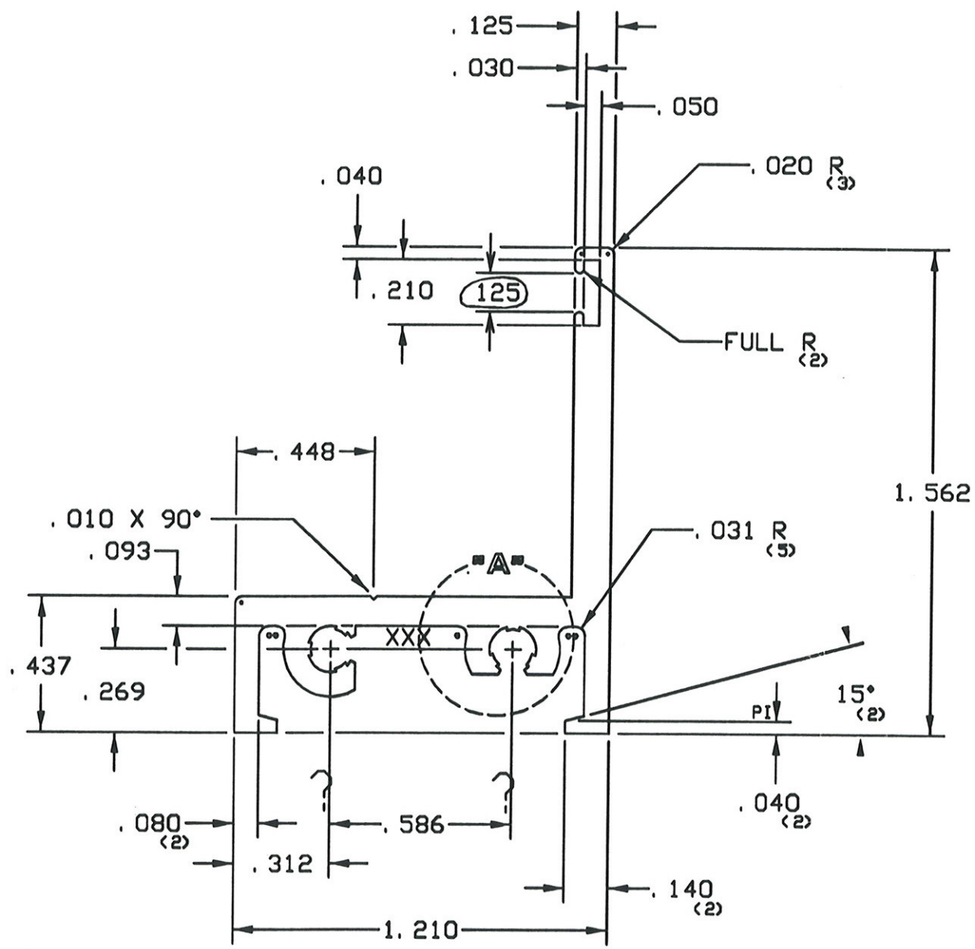

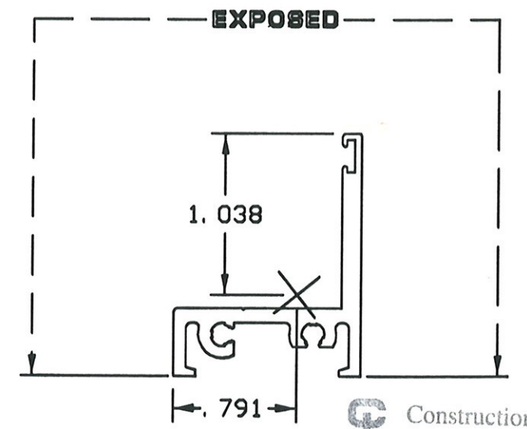

ACTUAL SIZE

Construction Consulting Laboratory, International
1601 Luna Road
Carrollton, Texas 75006
Phone (972) 242-0556
Report # 10880 Reviewed By
Date: 8-19-03

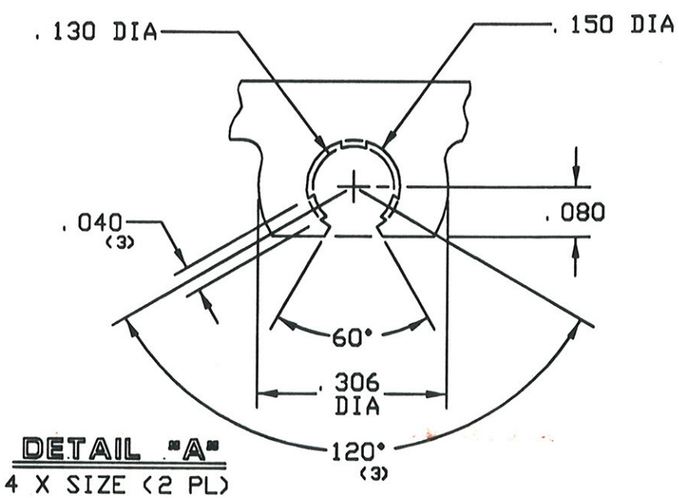

DETAIL "A"
4 X SIZE (2 PL)

NOTES:
1. 6063-T5 ALLOY AND TEMPER
2. PAINT PERIMETER = 4.621'
3. XXX INDICATES I.D. MARK FOR IEC-TX

SECTION PROPERTIES

Ixx = 0.064 IN^4
Sxx = 0.081 IN^3
Iyy = 0.051 IN^4
Syy = 0.049 IN^3

	.359	C-649	2
	.431	1.968	9 x 60980
	8.123	SOLID	42076
	19	7 57/BARBARA	T-60980 A1

- END OF REPORT -