CAT. NO. PH43R

CRL EUROPEAN 135° RIGHT HAND SIDELITE MOUNTED TRANSOM PATCH

EUROPEAN 2-9/16" (65mm)

Includes INT300 Insert, Cover Plates
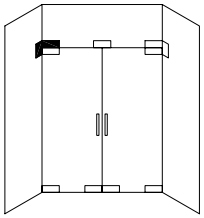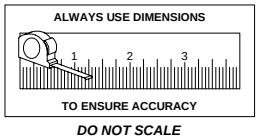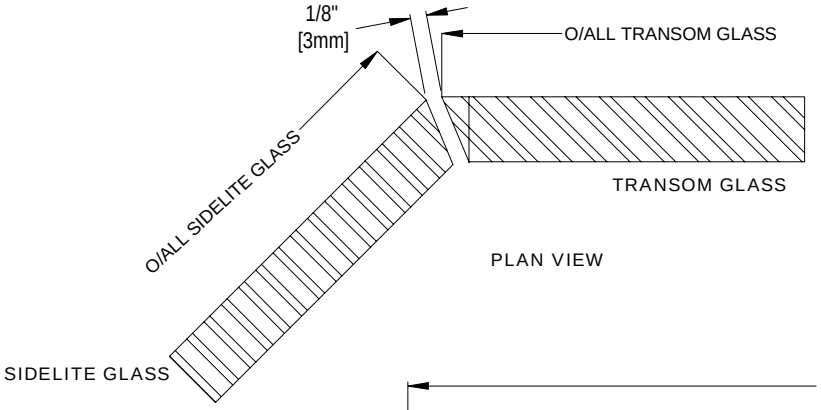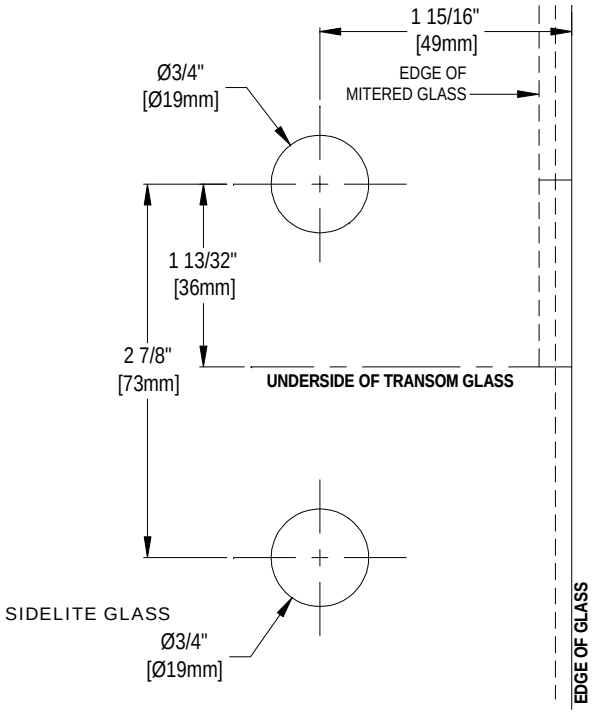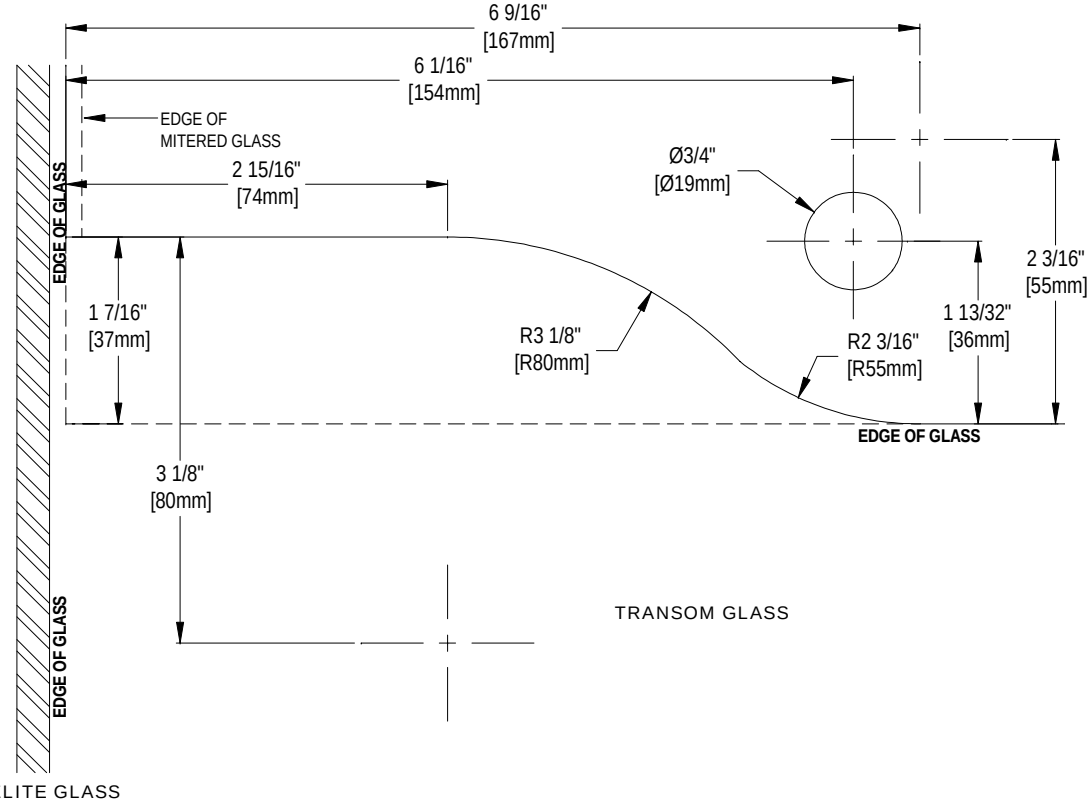
For Use With 3/8" Glass Only