3/16" (5mm) GLASS:	
1/4" (6mm) GLASS:	

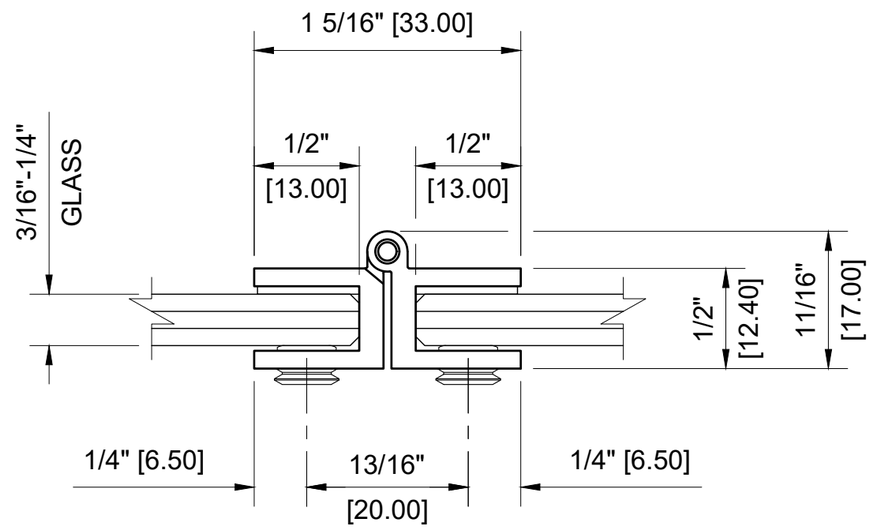

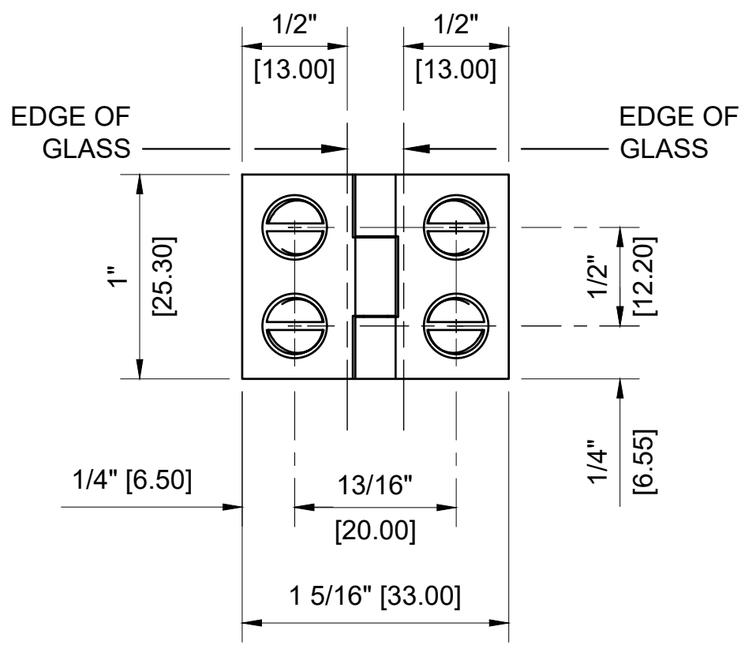

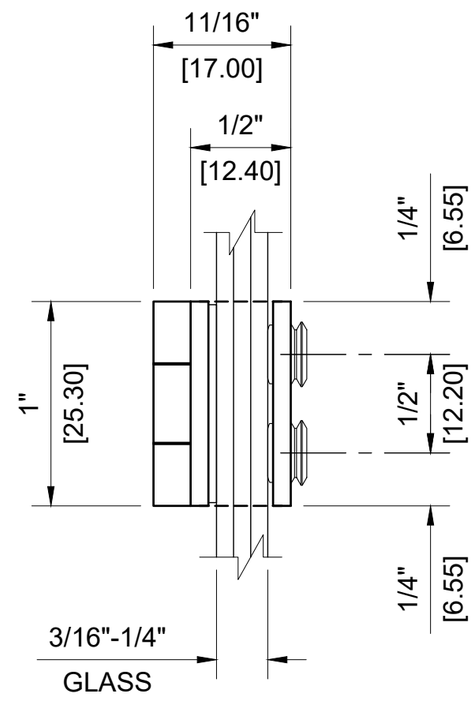

CRL - EH190 GLASS TO GLASS MOUNT SET SCREW OUT SWING HINGE FOR 3/16" - 1/4" GLASS

DATE:	7-24-2020
SCALE:	1'-0"=1'-0"
DRAWN BY:	VM

DESCRIPTION:

CRL - EH190 BRASS

GLASS TO GLASS MOUNT
OUT SWING SET SCREW HINGE

CRL.
C.R.LAURENCE CO. ARCHITECTURAL PRODUCTS
2503 E. Vernon Avenue, Los Angeles, C.A 90058-1897
PH (800)-421-6144 FX: 800-587-7501 www. crlaurence.com