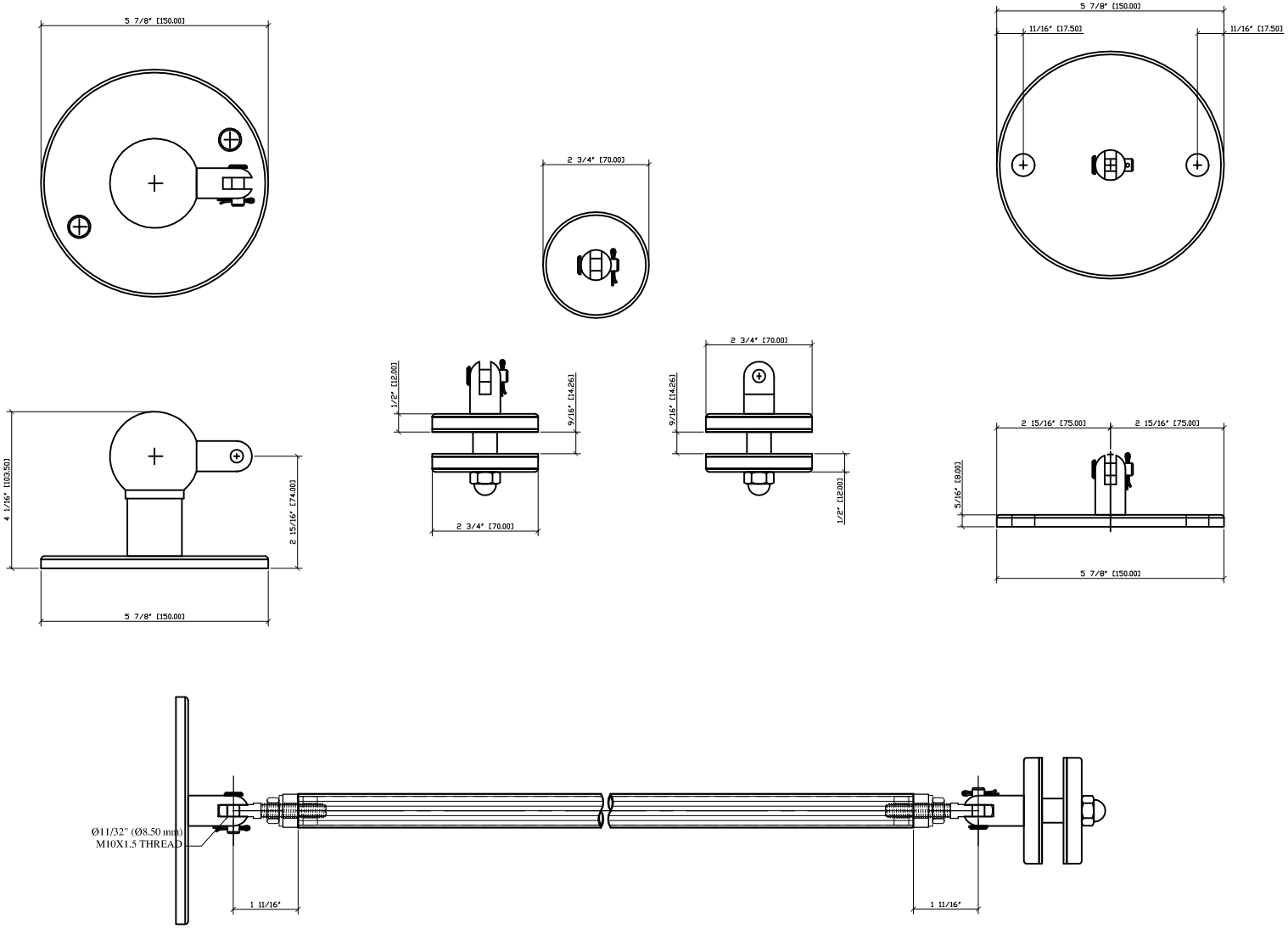

CUSTOMER SIGNATURE: X

DATE:

REVISIONS

C.R.LAURENCE CO.
ARCHITECTURAL PRODUCTS
2503 E. Vernon Avenue, Los Angeles, CA 90058
Phone: 800-421-6144 Fax: 800-362-3299
www.crlaurence.com

Job Name: GAS90XX

Glazing Contractor:
Company Name
Address
Address
Address
Phone: xxx-xxx-xxxx
Fax: xxx-xxx-xxxx

DATE:	06-09-2010
DRAWN BY:	JRM
CHECKED BY:	
SCALE:	1:1
JOB #:	--------

SHT 8 OF __