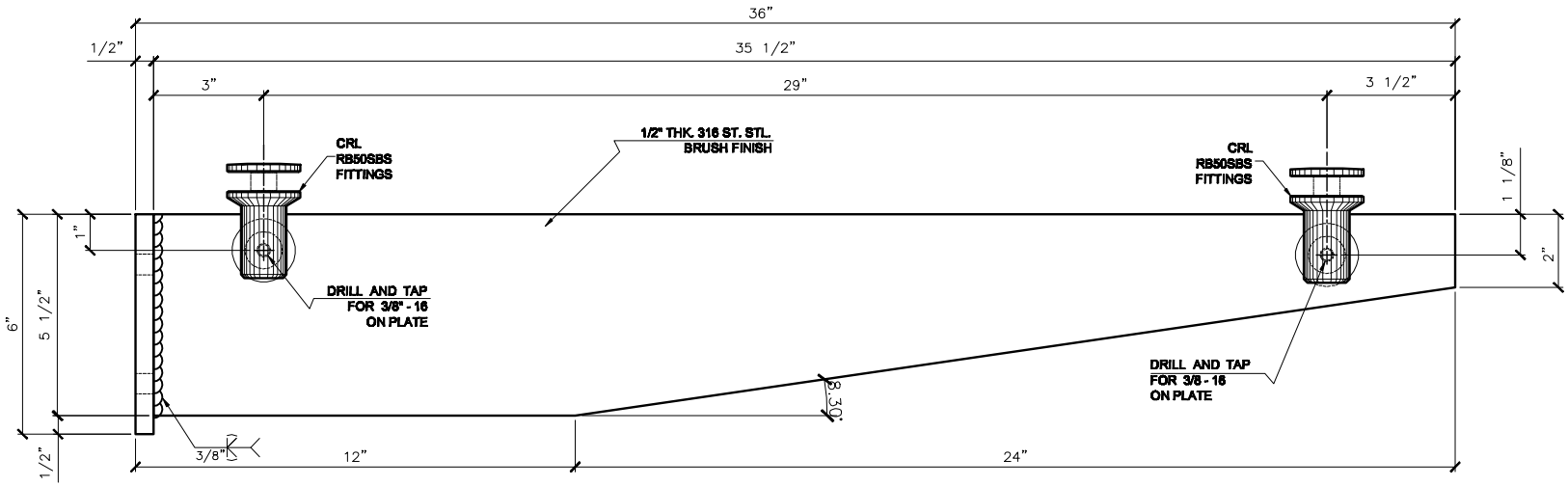

CRL 36" - GAB36
Scale: 1 = 5

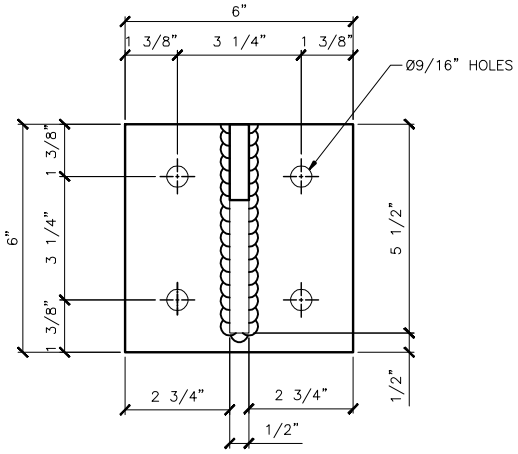

BASE PLATE
Scale: 1 = 5

UNIVERSAL WALL MOUNTED GLASS AWNING BRACKET ASSEMBLY DETAIL

CATALOG NUMBER	FINISH
GAB36BS	BRUSHED STAINLESS
GAB36PS	POLISHED STAINLESS

C.R.LAURENCE CO.
ARCHITECTURAL PRODUCTS
PH: 800-421-6144 FX: 800-262-3299
WWW.CRLAURENCE.COM

DESCRIPTION: UNIVERSAL WALL MOUNTED GLASS AWNING BRACKET

CAT. NO: (SEE CHART)		DATE: 10/22/08	1
FILE NAME: -		SCALE: AS SHOWN	
DRAWN BY: J.R.M.	CHECKED BY: A.R.	SHT 1 OF 1	