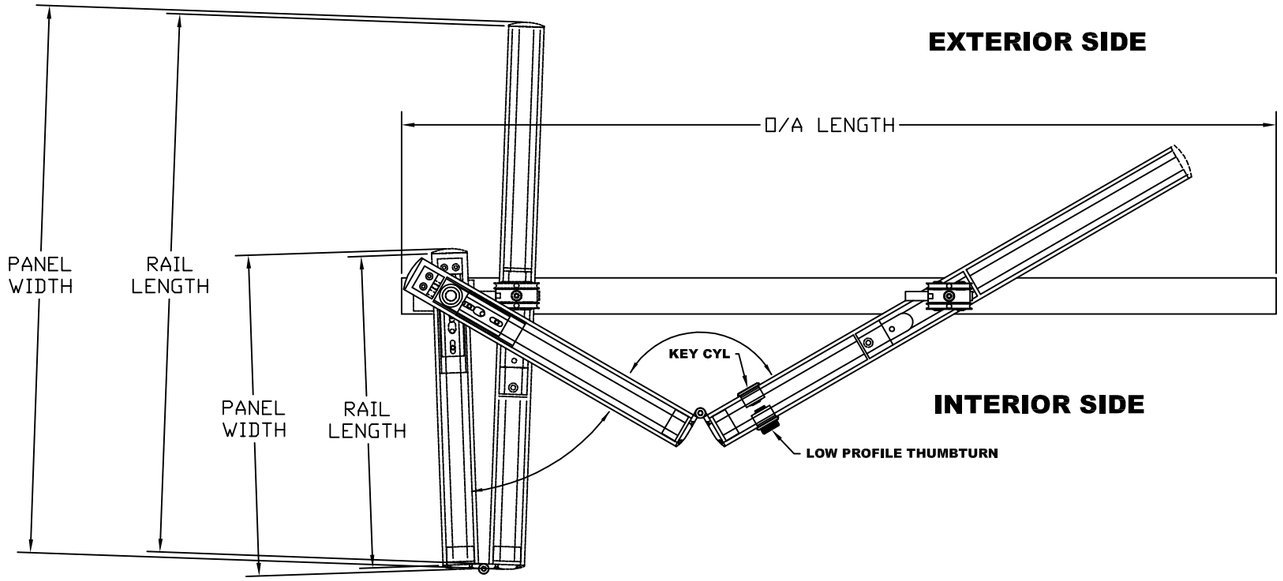

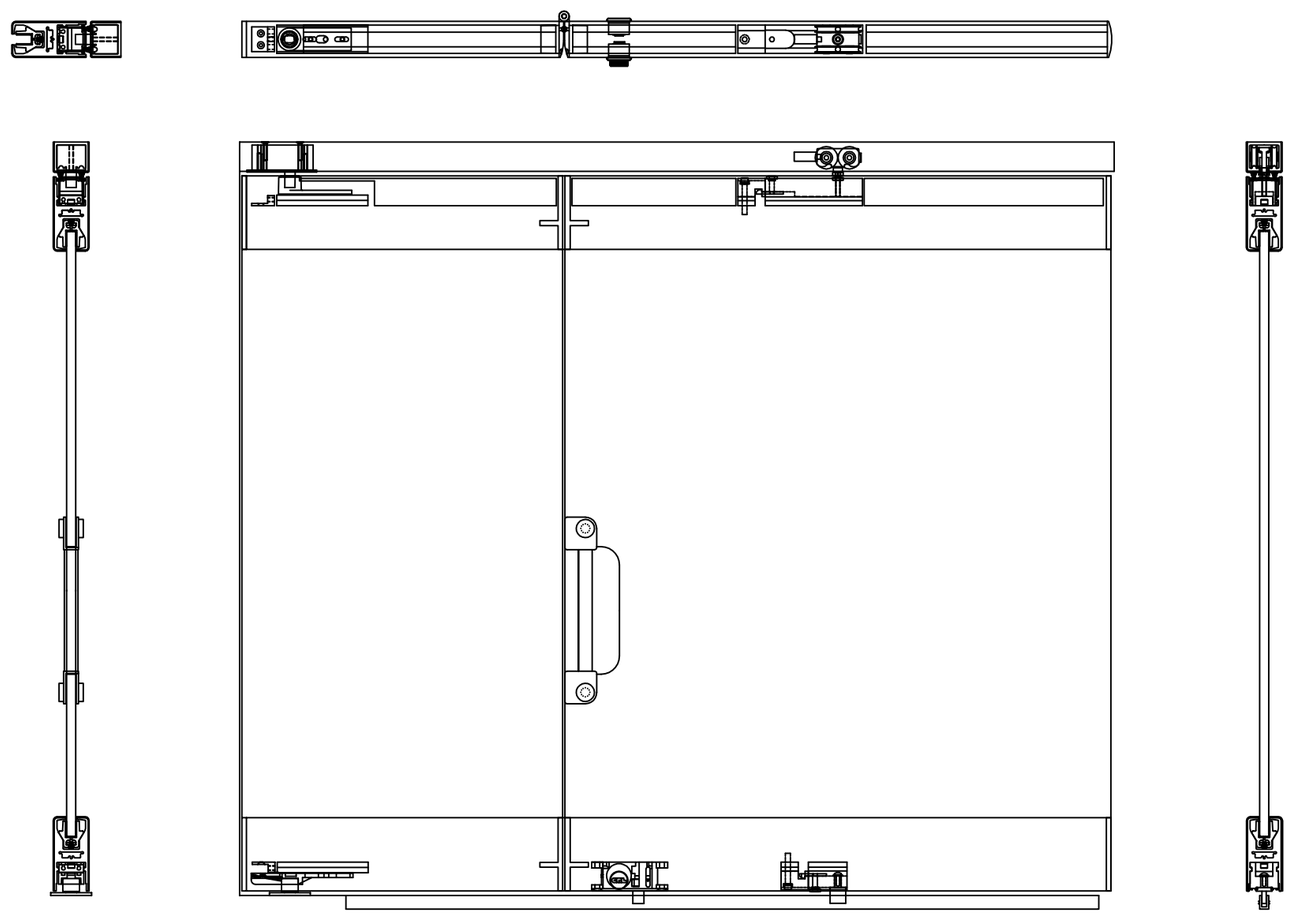

STD LOCK POSITION SHOWN

REV.	DESCRIPTION	DATE	BY

THIS DRAWING AND THE DESIGN SHOWN THEREIN IS THE PROPERTY OF C.R.LAURENCE CO., INC. AND USE OR COPIES THEREOF CANNOT BE MADE WITHOUT WRITTEN CONSENT.

C.R. Laurence Co.,Inc
1334 W. 132 Street
GARDENA, CALIFORNIA 90249
PHONE: (310) 515-2289
FAX: (310) 515-1257

DRAWN BY:	SCALE:	DATE:	PART NUMBER
RJB	NTS	06/18/03	0TC2

PART: **GENERAL ASSEMBLY**

PRODUCT: **HALF LEAF BI-FOLD DOOR 2-PANEL**

NOTE:

DRAWING NUMBER: **0TC2**