ZER000 ZERO HINGE
180-Degree Installation
1/16"[1mm] Fixed Panel Clearance

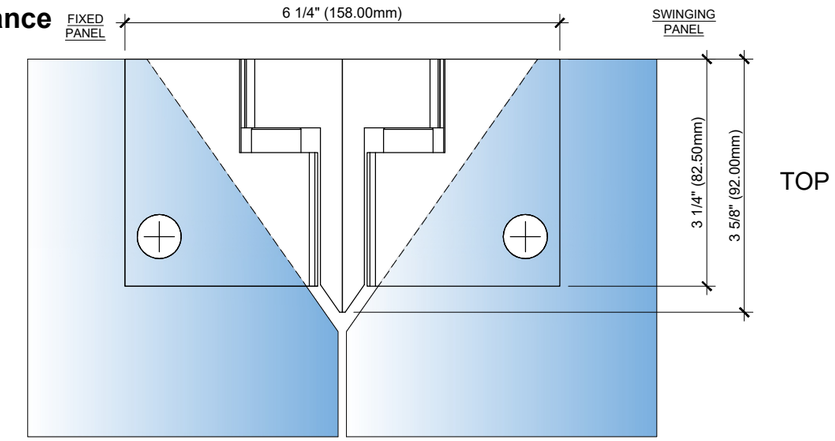

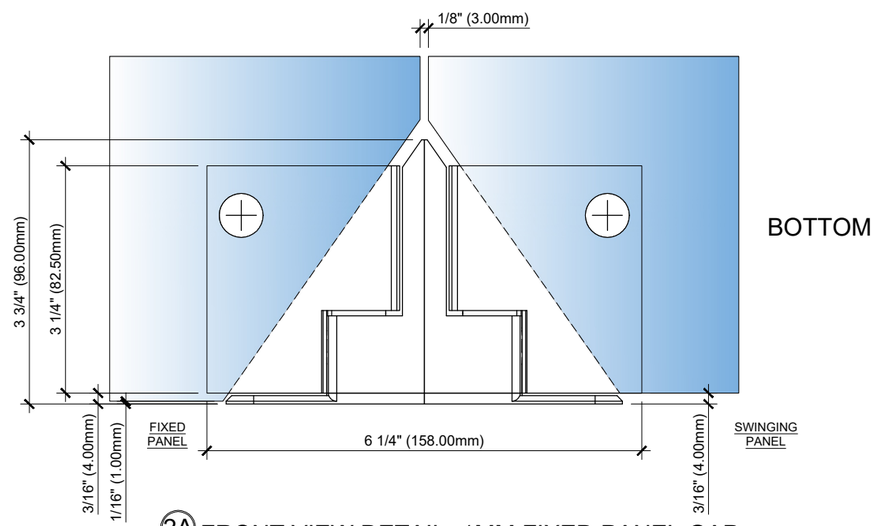

2A FRONT VIEW DETAIL -1MM FIXED PANEL GAP

ARCH REF: SCALE: 1'-0"=1'-0"

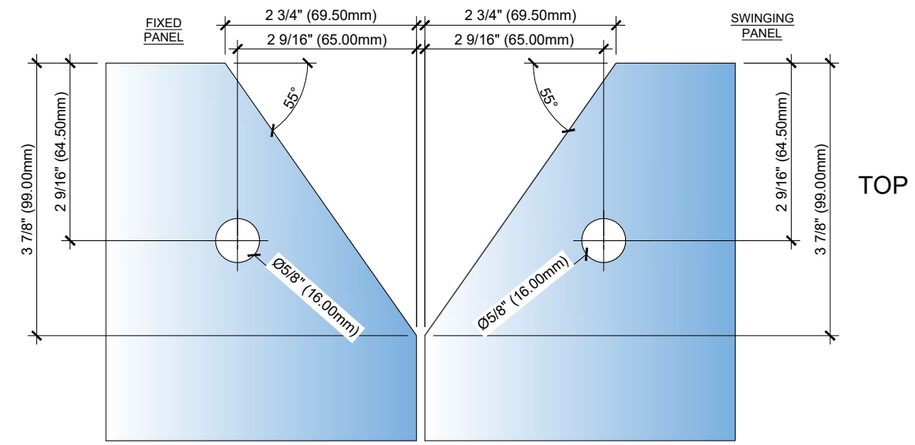

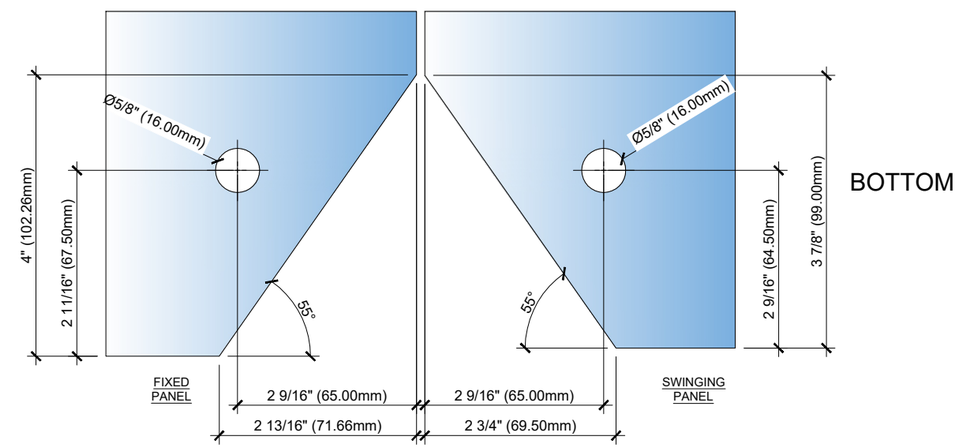

3A GLASS CUT OUT DETAIL - 1MM FIXED PANEL GAP

ARCH REF: SCALE: 1'-0"=1'-0"

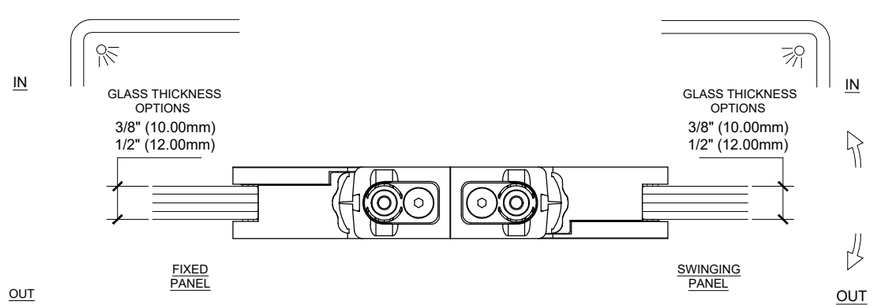

1 PLAN VIEW DETAIL

ARCH REF: SCALE: 1'-0"=1'-0"

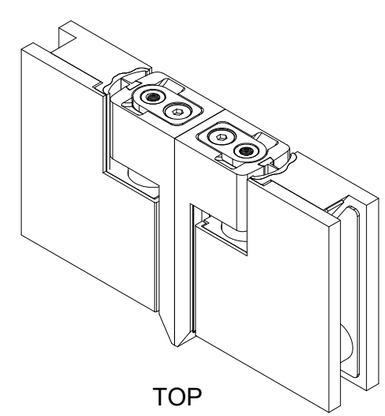

TOP

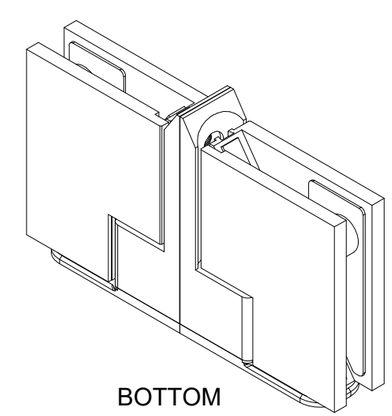

BOTTOM

SHEET NO: 1 OF 2
DWG NO: SYS0133A

PART DISCRIPTION: ZERO HINGE-180 DEG; 1MM FIXED
BRAND: ZERO HINGE SYSTEM

THIS DRAWING AND THE DESIGN SHOWN THEREIN IS THE PROPERTY OF C.R.LAURENCE CO., INC. AND USE OR COPIES THEREOF CANNOT BE MADE WITHOUT WRITTEN CONSENT.

CRL.
C.R.LAURENCE CO.
2503 E. Vernon Avenue, Los Angeles, C.A 90058-1897
PH [800]-421-6144 FX: 800-587-7501
www. crlaurence.com