GLASS: 1/4" (6mm)
GLASS: 3/8" (10mm)

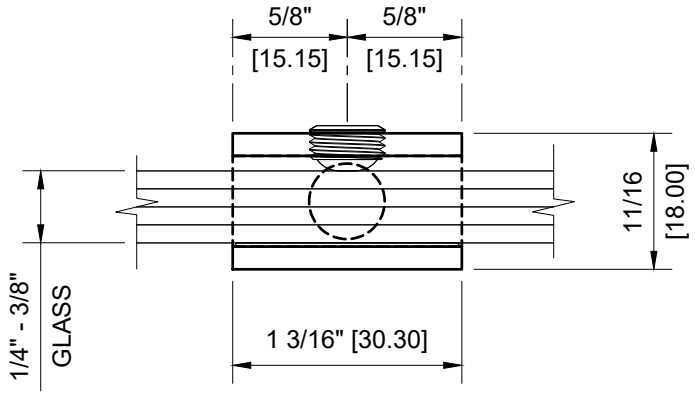

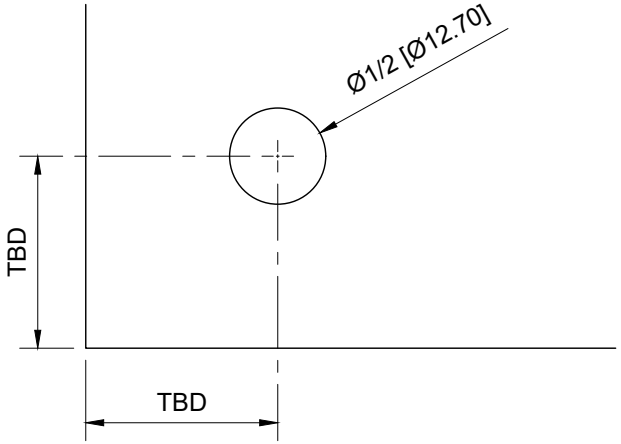

GLASS FABRICATION TEMPLATE

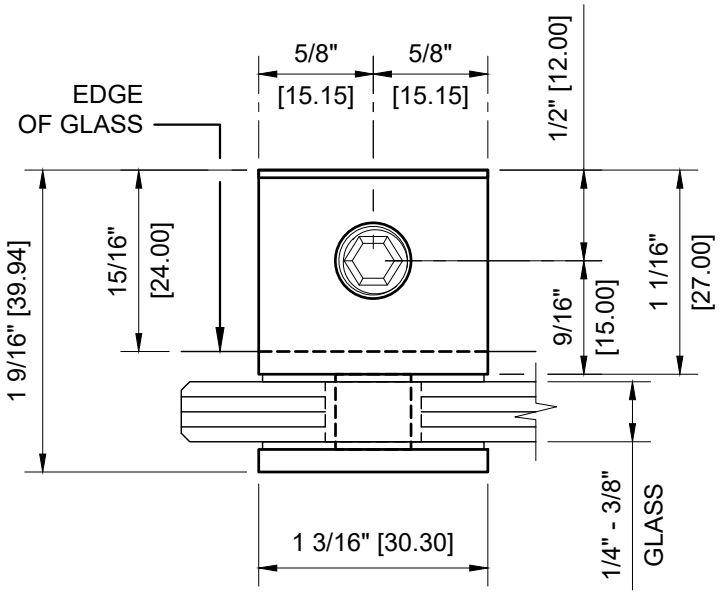

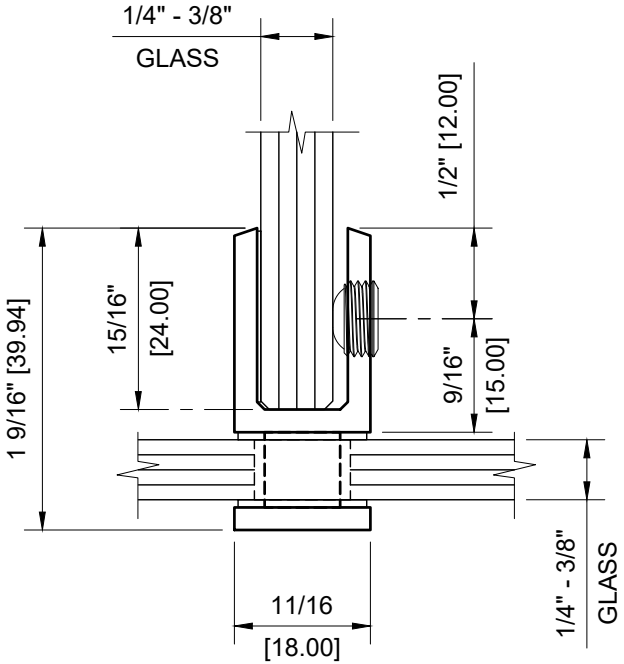

CRL - FA80 THRU- GLASS SQUARE CORNERED SHELF CLAMP FOR 1/4" - 3/8" GLASS

DATE: 10-1-2020
SCALE: 1'-0"=1'-0"
DRAWN BY: VM

DESCRIPTION: CRL - FA80
THRU-GLASS SQUARE CORNERED SHELF CLAMP

CRL A CRH COMPANY
C.R.LAURENCE CO. ARCHITECTURAL PRODUCTS
2503 E. Vernon Avenue, Los Angeles, C.A 90058-1897
PH (800)-421-6144 FX: 800-587-7501 www. crlaurence.com