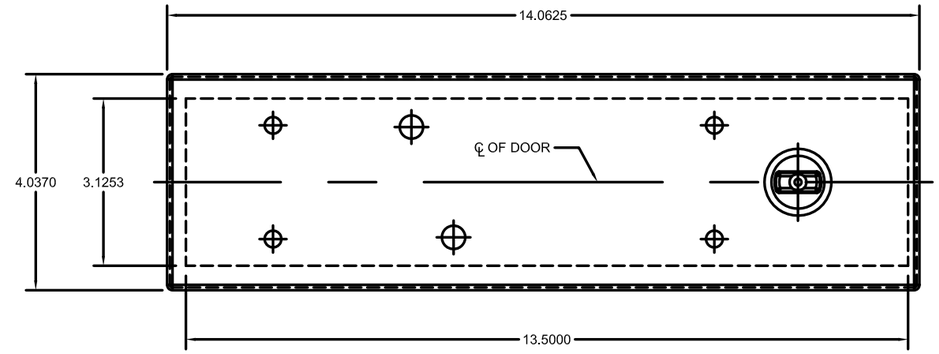

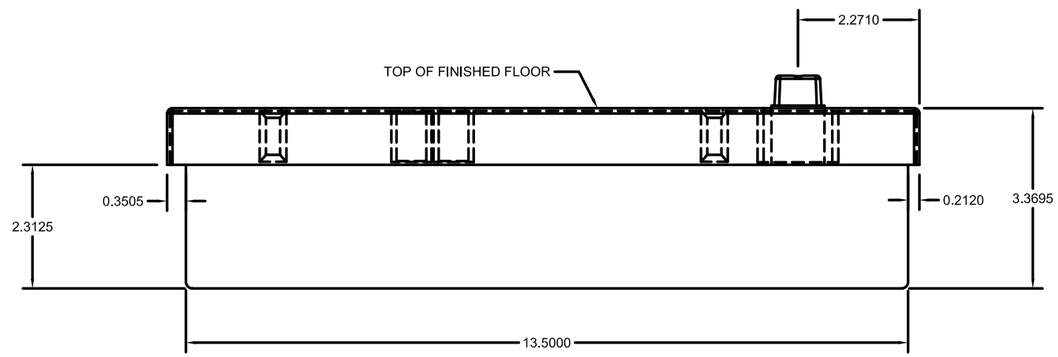

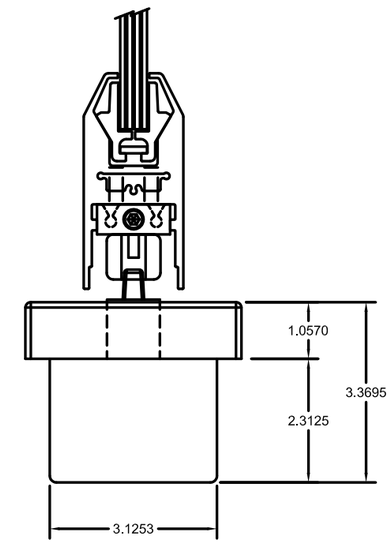

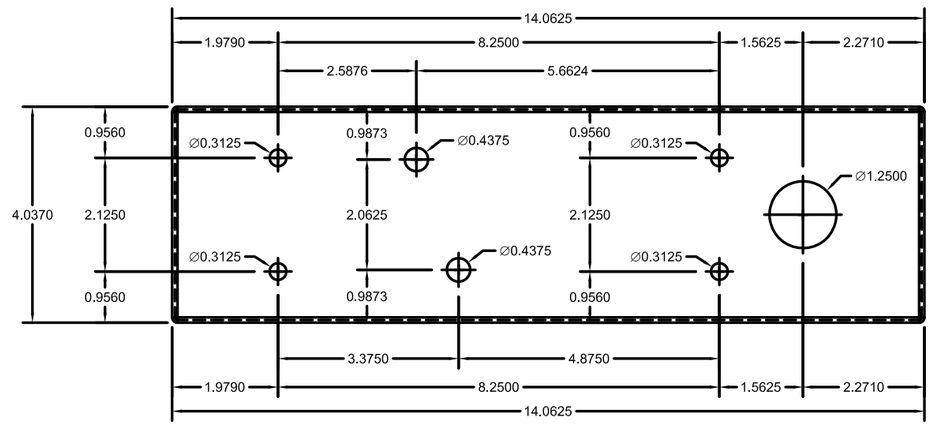

NOTES:
1. DO NOT SCALE DRAWING
-FOR REFERENCE ONLY.

2. DIMENSIONS ARE
GIVEN IN INCHES

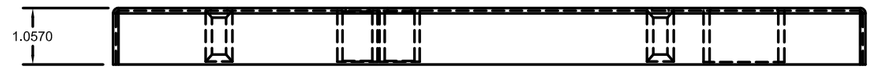

C.R. Laurence Co.

TPCRL85
TERRAZZO PAN