1/4" (6mm) GLASS:	
5/16" (8mm) GLASS:	

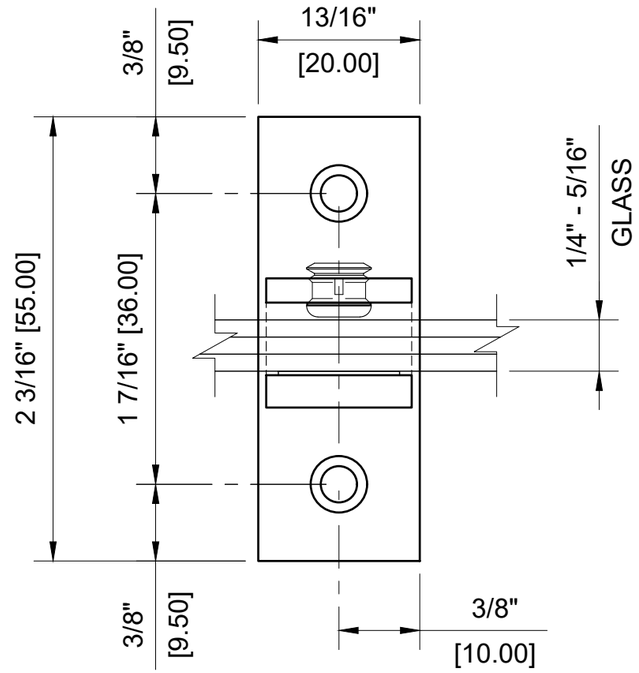

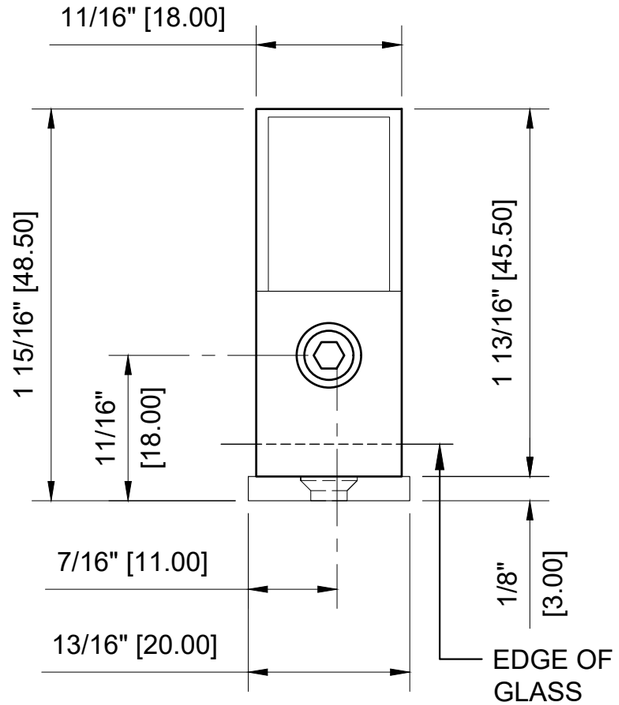

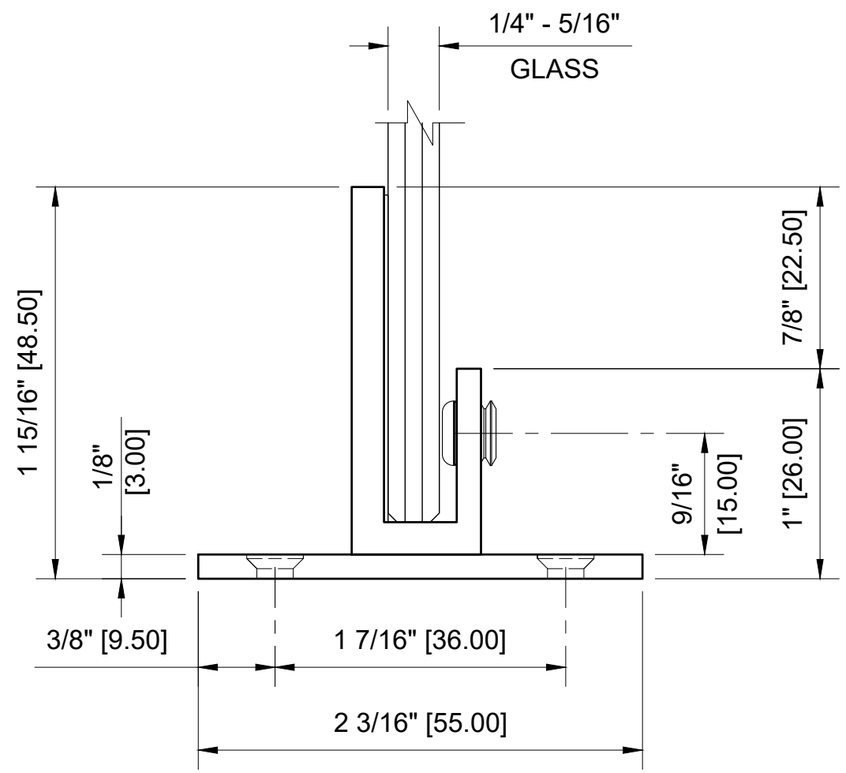

CRL - EH50 CHROME LONG LEG SET SCREW VERTICAL SHELF CLAMP FOR 1/4" - 5/16" GLASS

DATE:	4-29-2020
SCALE:	1'-0"=1'-0"
DRAWN BY:	VM

DESCRIPTION:
CRL - EH50 CHROME
LONG LEG SET SCREW
LARGE VERTICAL SHELF CLAMP
FOR 1/4" TO 5/16" GLASS

CRL
C.R.LAURENCE CO. ARCHITECTURAL PRODUCTS
2503 E. Vernon Avenue, Los Angeles, C.A 90058-189
PH (800)-421-6144 FX: 800-587-7501 www. crlaurence.com