# CAT. NO. PH42R

## CRL EUROPEAN 90° RIGHT HAND SIDELITE MOUNTED TRANSOM PATCH

**North American 2-3/4" (70mm) or European 2-9/16"(65mm) Setback**

**Includes INT300 Insert, Cover Plates**
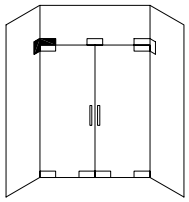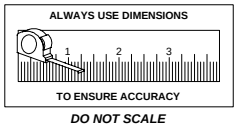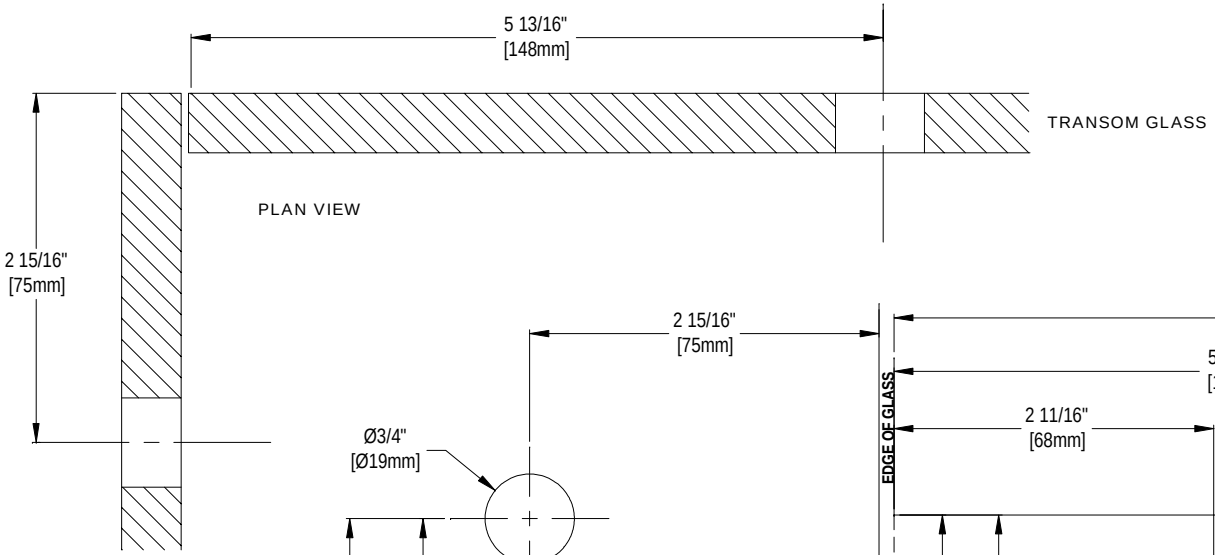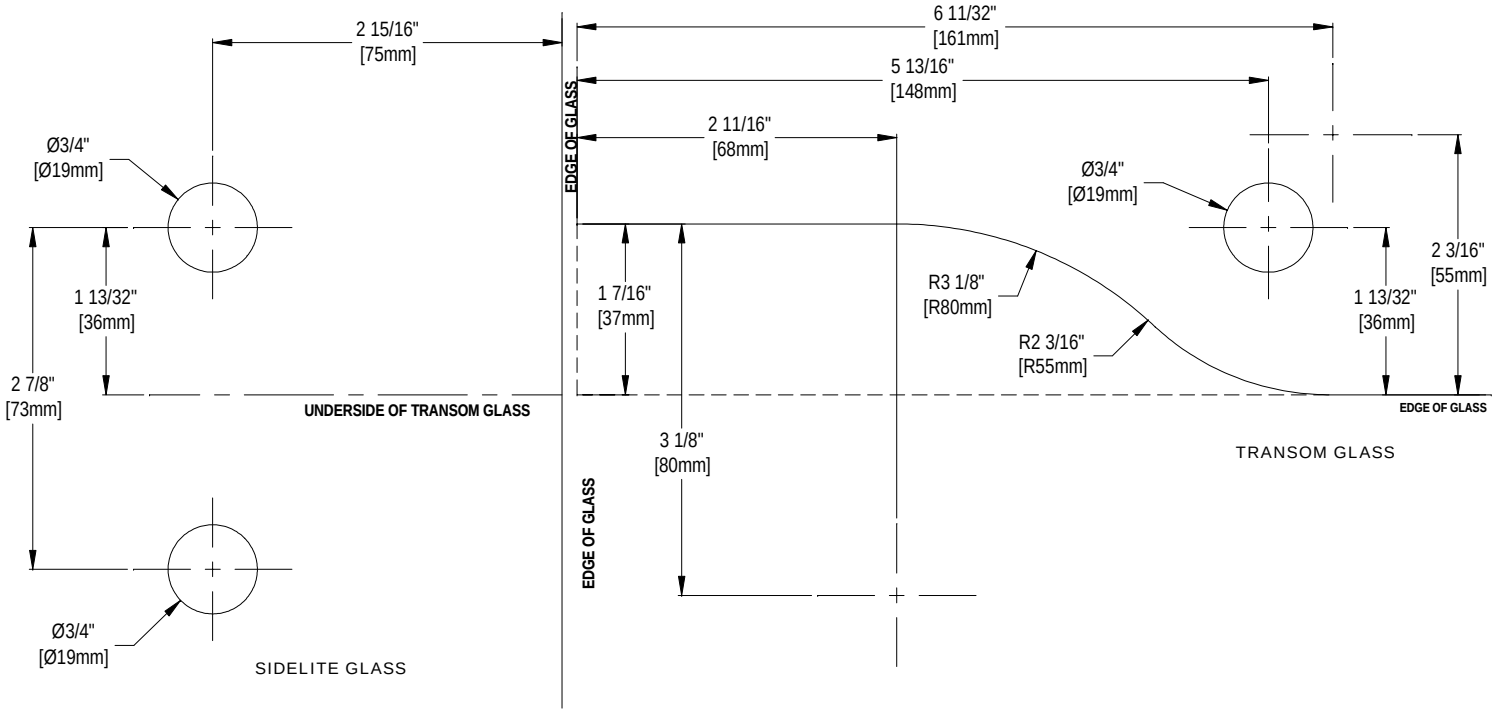
**For Use With 3/8" Glass Only**