REV	DESCRIPTION	DATE	BY

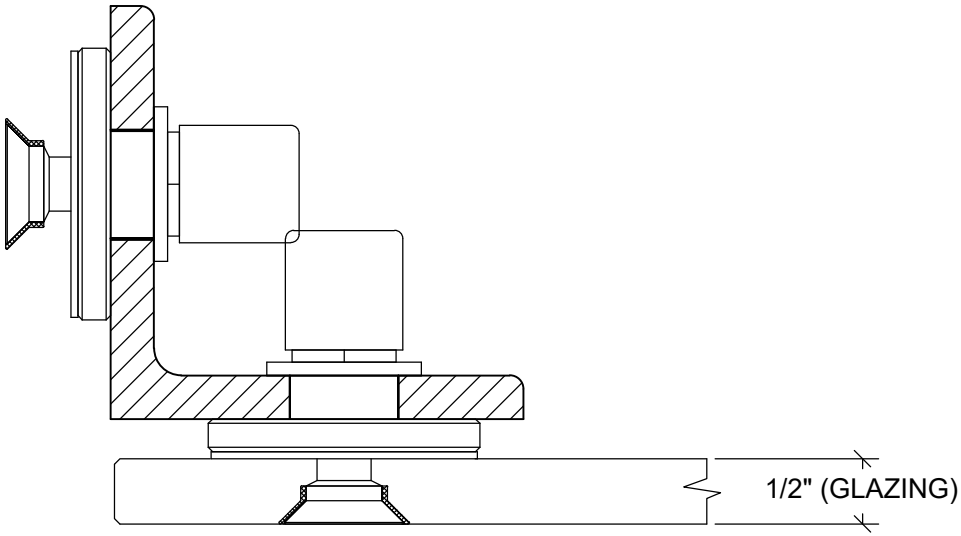

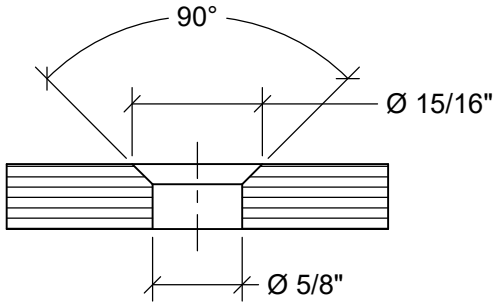

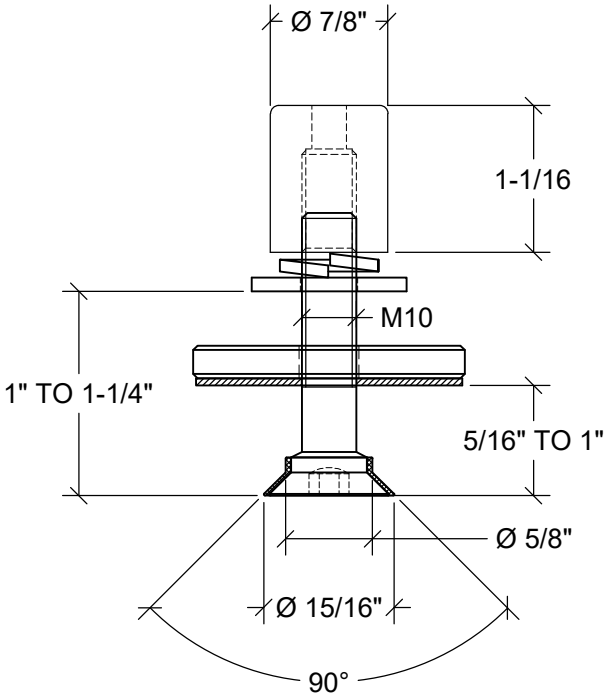

CRL. ISO9000 CERTIFIED COMPANY

ARCHITECTURAL PRODUCTS
PH: 800-421-6144 FX: 800-262-3299
WWW.CRLAURENCE.COM

DESCRIPTION: PART # CBP901

CAT. NO:		DATE: 05-21-04	
FILE NAME:		SCALE: AS SHOWN	
DRAWN BY: C.H	CHECKED BY:	SHT 1 OF 1	